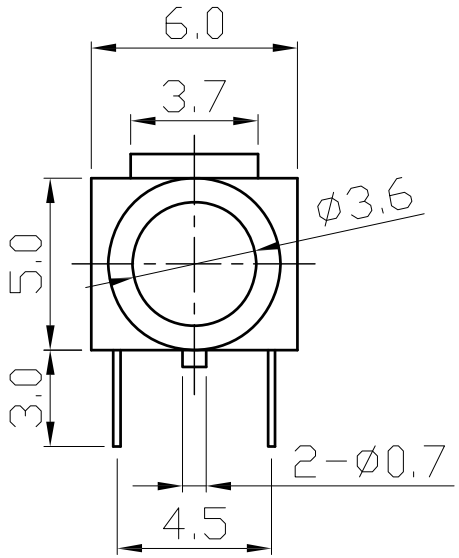

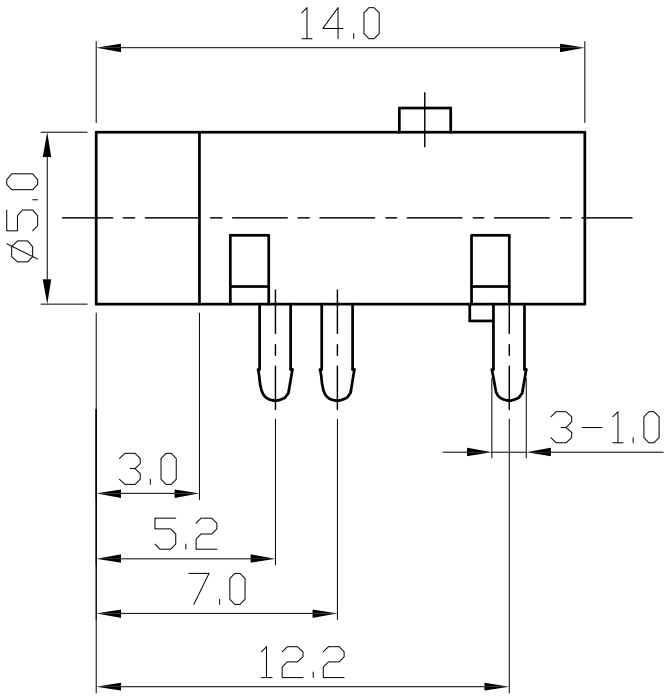

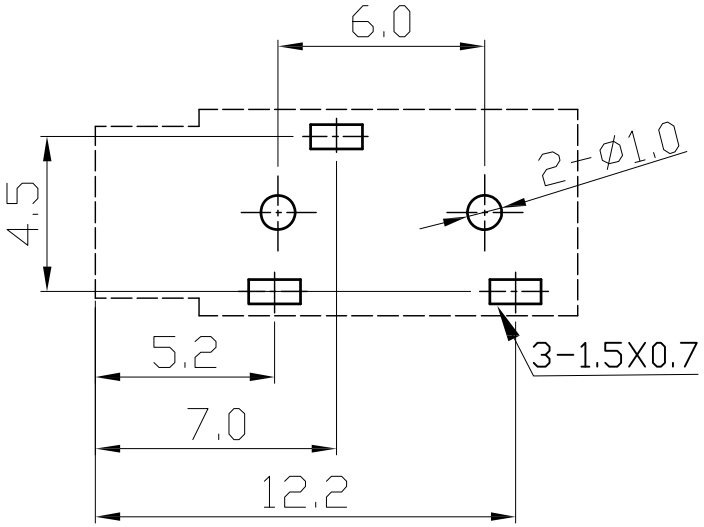

SCHEMATIC

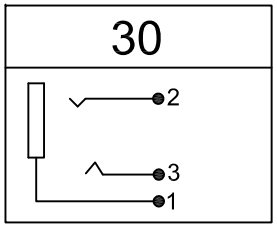

ROHS COMPLIANCE

CODE NO.		MODLE NAME	TPJ-3J31-□-□-30-11YU
PATH :	Jack\3.5mm Earphone Jack\Spec	DRAWING NO.	TPJ-3.5EJ-145

TOLERANCES		APPROVED SIGNATURES	DRAWN BY	CHECKED BY	APPROVED BY	SCALE	1/1	UNIT	m/m	VERSION	A
X	±0.5		Ailsa	Nicole	余 倩						
X.X	±0.3										
X.XX	±0.15										
X°	±5°										
X.X°	±3°		2012.11.16	2012.11.16	2012.11.16						

△			
△			
△			
1	2012.11.16	Yu qian	首次出圖

Third Angle Projection

可正欣有限公司
TOP-UP INDUSTRY CORP.