Switch on your world

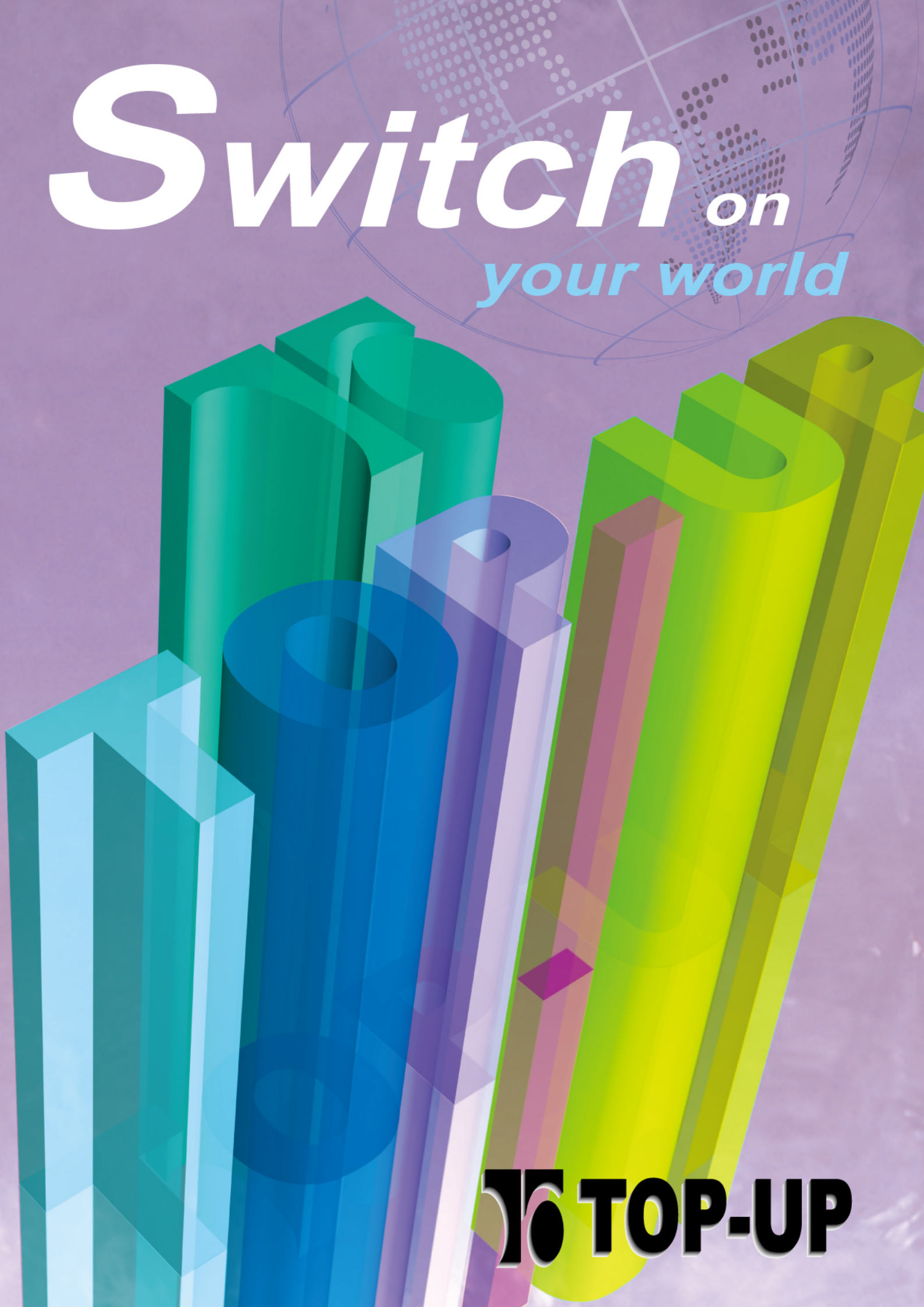

TOP-UP

Contents

Foot Switch Series Page

10

Rotary Switch Series

12

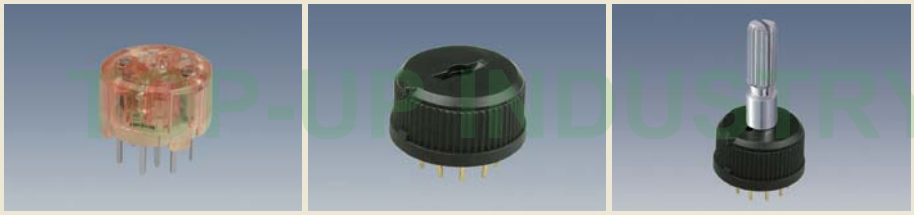

14

16

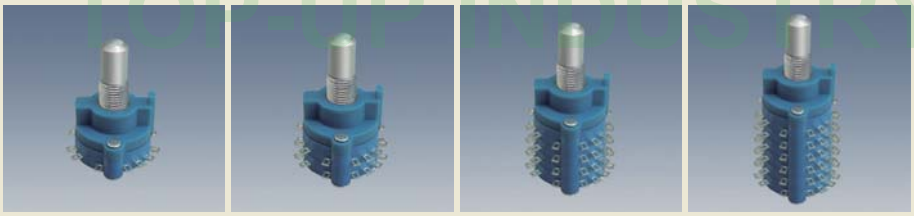

18

19

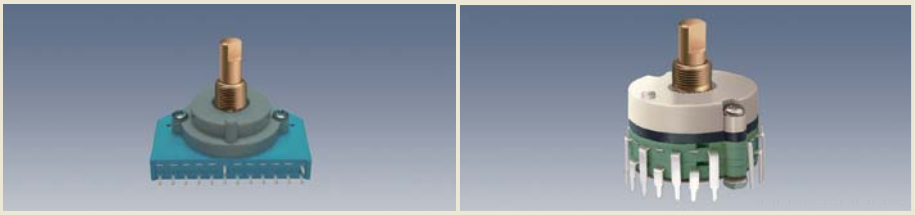

20

The drawings and specifications are for reference only. For further detail, please contact Top-up head office.

Contents

Rotary Switch Series Page

22

23

24

LED Push Button Switch Series

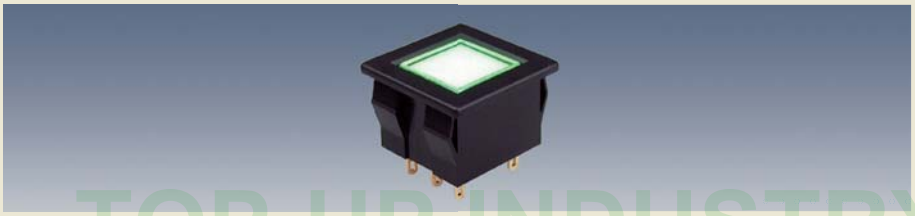
26

27

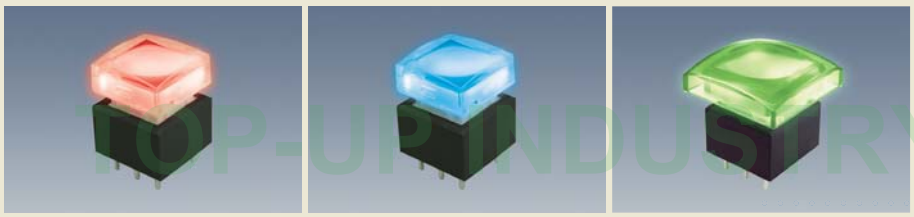
28

30

The drawings and specifications are for reference only. For further detail, please contact Top-up head office.

Contents

LED Push Button Switch Series — Page

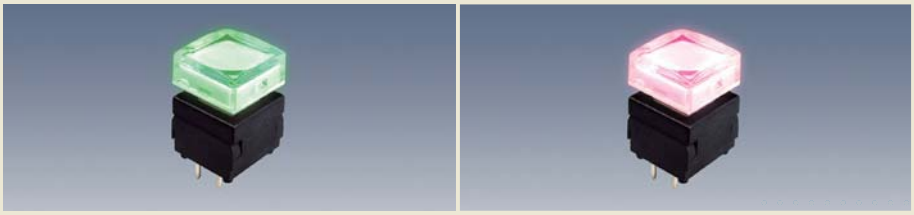

32

34

Push Switch Series

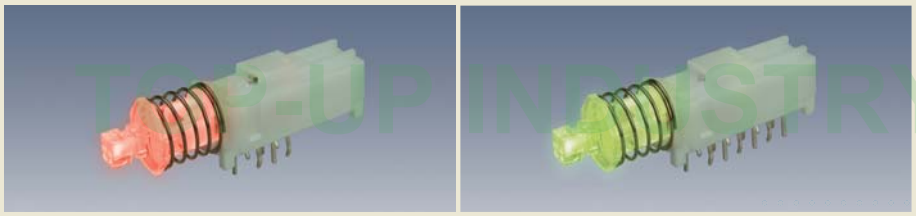

With LED 36

With LED 38

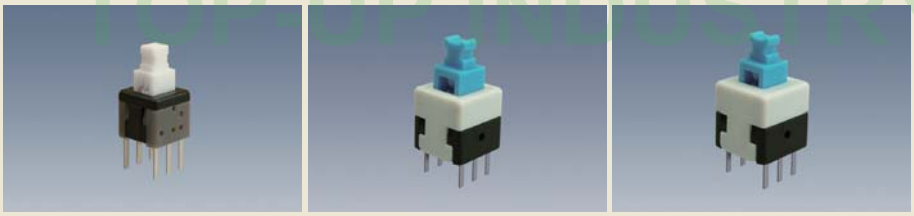

39

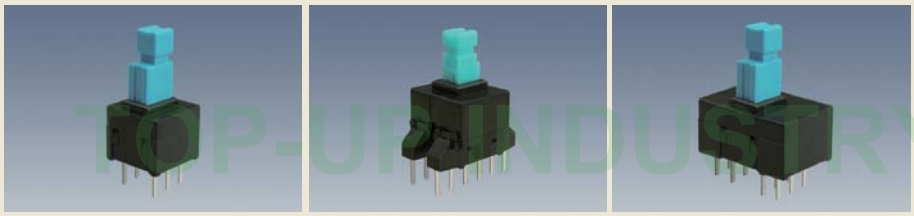

40

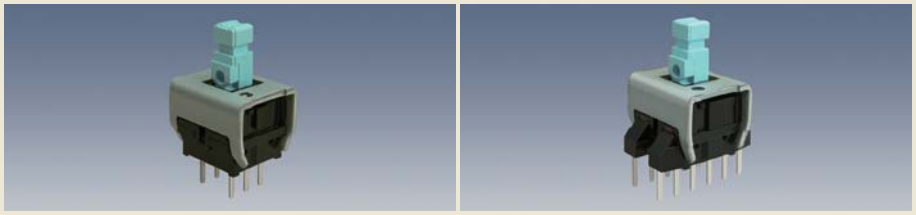

42

TOP-UP INDUSTRY CORP.

The drawings and specifications are for reference only. For further detail, please contact Top-up head office.

Contents

Push Switch Series

Page

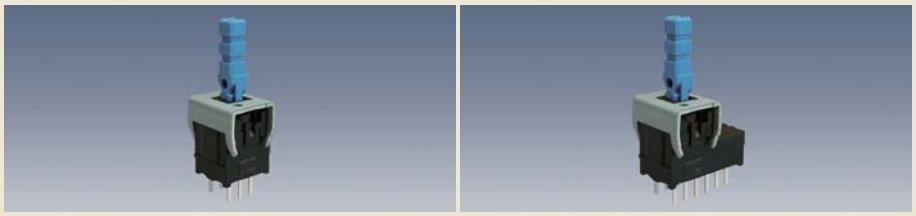
43

45

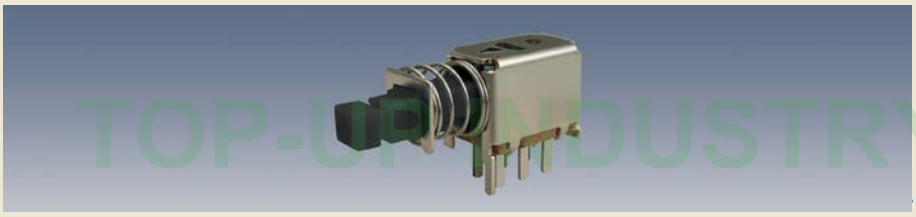
46

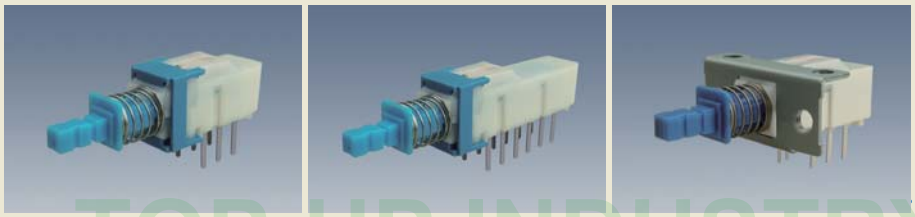
48

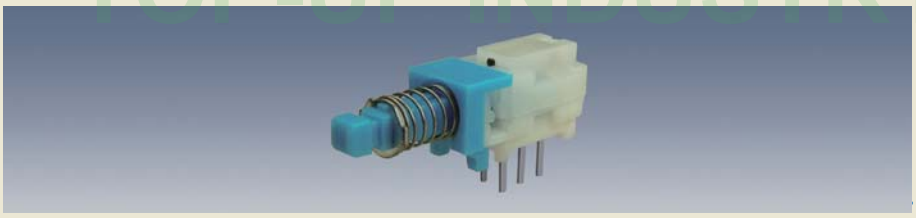
50

Power Switch Series

52

The drawings and specifications are for reference only. For further detail, please contact Top-up head office.

Contents

5 Direction Switch & Double Action Tact Switch Series

Page

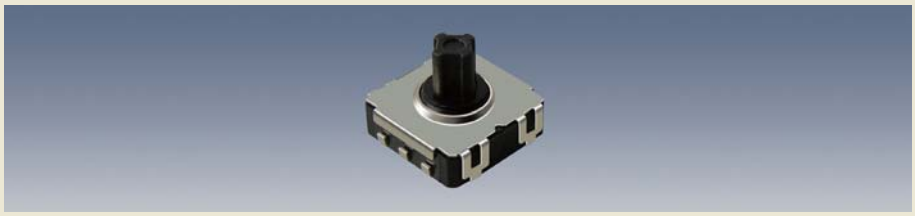

54

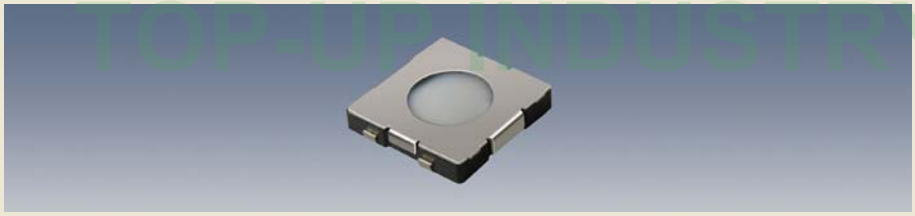

56

LED Tact Switch Series

58

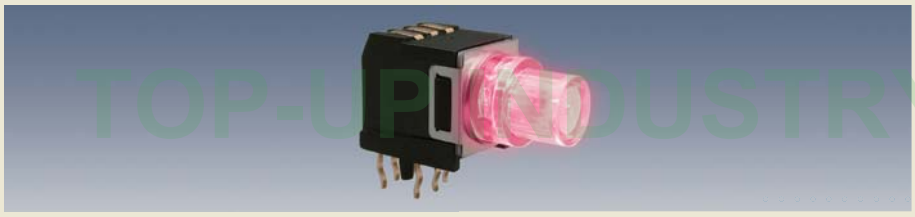

60

62

63

TOP-UP INDUSTRY CORP.

The drawings and specifications are for reference only. For further detail, please contact Top-up head office.

Contents

Tact Switch Series Page

Cap 64

66

67

With LED 68

70

71

TOP-UP INDUSTRY CORP.

The drawings and specifications are for reference only. For further detail, please contact Top-up head office.

Contents

Tact Switch Series **Page**

72

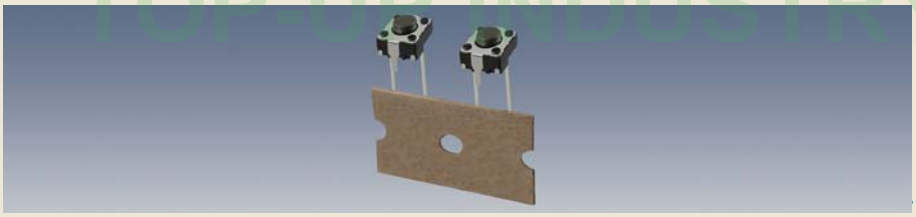

74

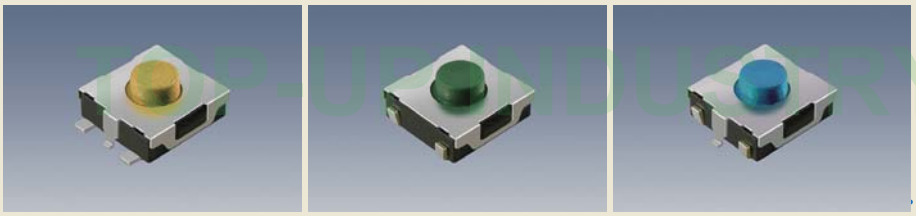

76

78

79

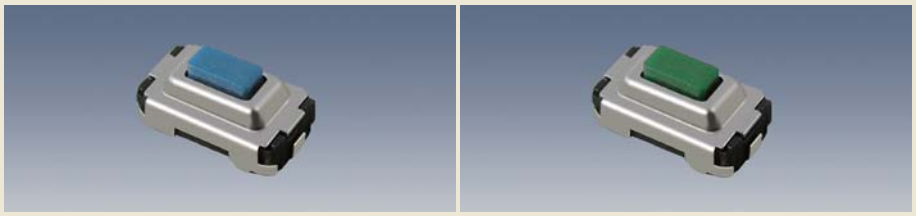

81

TOP-UP INDUSTRY CORP.

The drawings and specifications are for reference only. For further detail, please contact Top-up head office.

Contents

Tact Switch Series **Page**

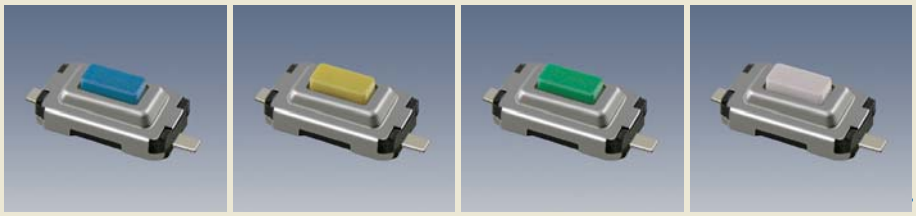

82

84

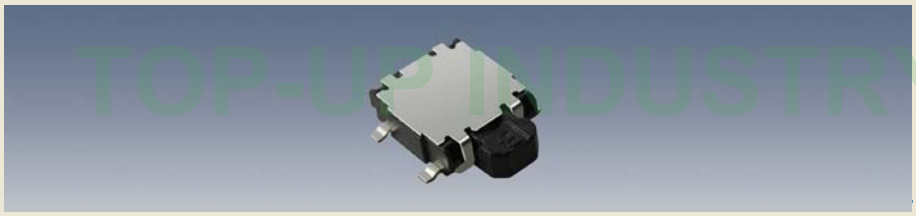

86

88

90

91

TOP-UP INDUSTRY CORP.

The drawings and specifications are for reference only. For further detail, please contact Top-up head office.

Foot Switch PSA / PSB Series Code Explanation

PSA - □ □ - □ - Series NO.

Series Symbol

Code	Description
PSA	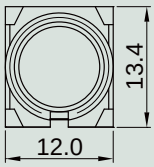
PSB	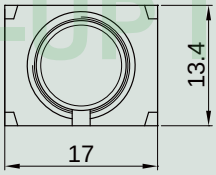

Terminal

Code	Description
B	P.C.B
B1	SOLDER

Pole - Position

Code	Description
32	3 P 2 T
22	2 P 2 T

Screw Dimension

Code	Description
12	M12*0.75

SPECIFICATION

Rating:	AC 125V 6A / AC 250V 3A / DC 30V 4A
Contact Resistance:	50mΩ Max Silver contacts
Insulation Resistance:	DC 500V 100mΩ min.
Withstand Voltage:	AC 1000V 1minute
Operating force:	1.2 ± 0.3kgf
Life Cycle:	30,000 Cycles

TOP-UP INDUSTRY CORP.

The drawings and specifications are for reference only. For further detail, please contact Top-up head office.

PSA-22B

PSA-22B1

PSB-32B

PSB-32B1

Outline Drawing

PSA-22B

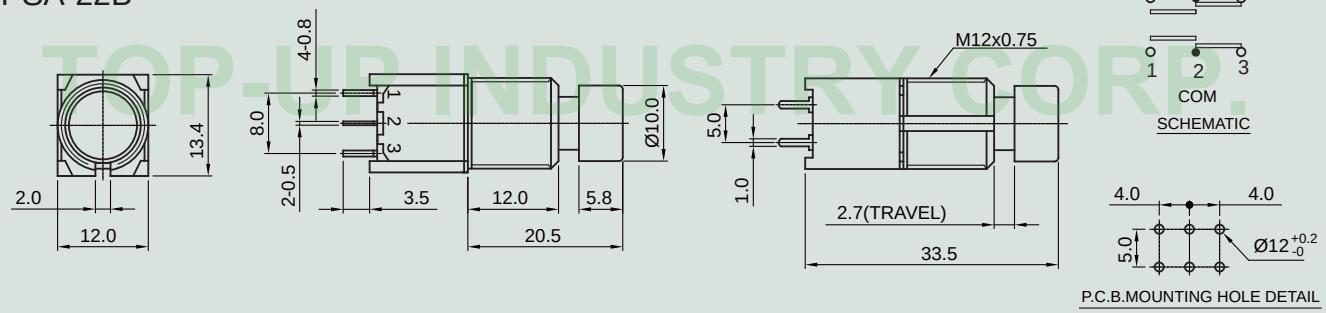

PSA-22B1

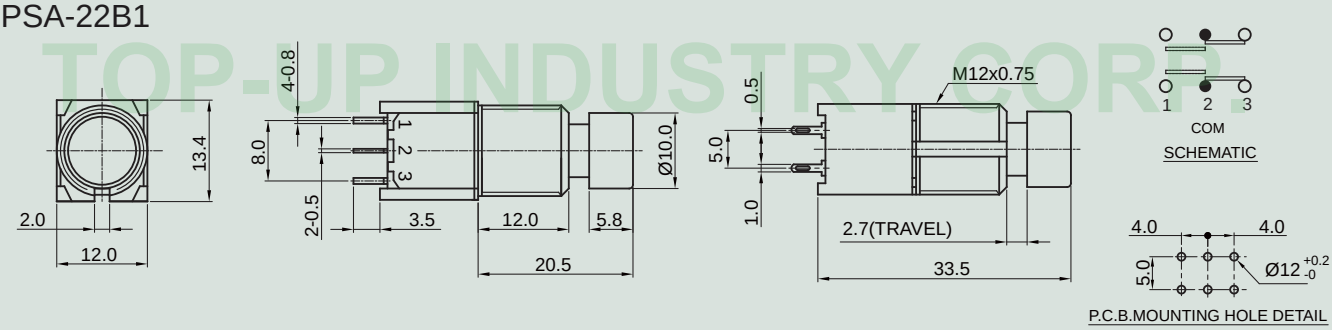

PSB-32B

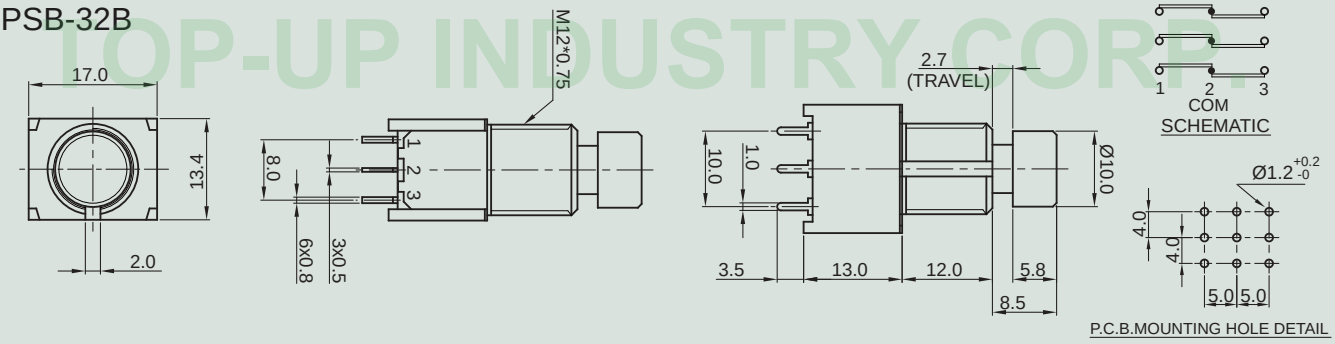

PSB-32B1

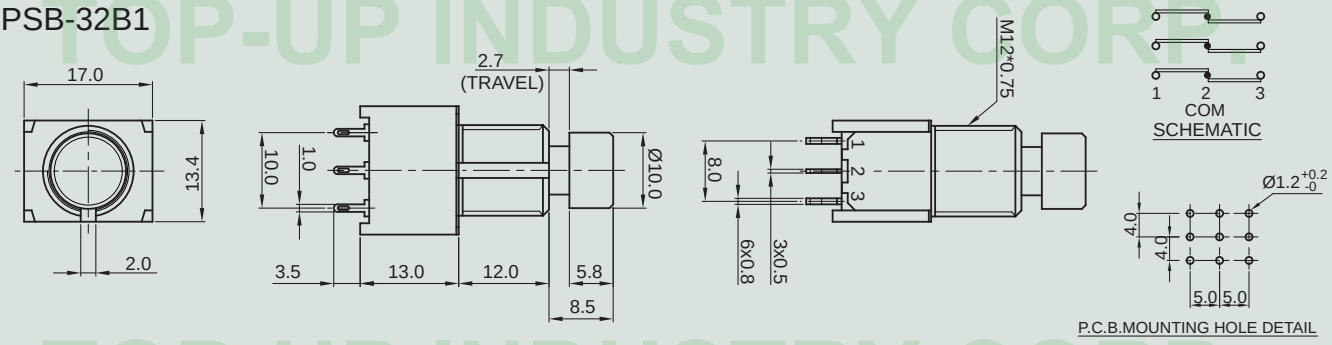

TOP-UP INDUSTRY CORP.

The drawings and specifications are for reference only. For further detail, please contact Top-up head office.

SRRM12 □ - □ - □ □ - □ - □ - Series NO.

Series Symbol

Code	Description
SRRM12	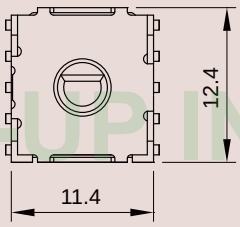

Terminal

Code	Description
B	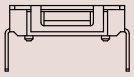
SMT	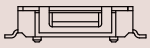

Pole - Position

Code	Description
0109	1 P 9 T

Timing

Code	Description
S	Shorting
N	Non-Shorting

Shaft Type

Code	Description
F	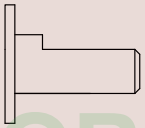

Shaft Length

Rotational Torque

Code	Description
Blank	60 ± 30gf.cm
B	130 ± 50gf.cm

TOP-UP INDUSTRY CORP.

The drawings and specifications are for reference only. For further detail, please contact Top-up head office.

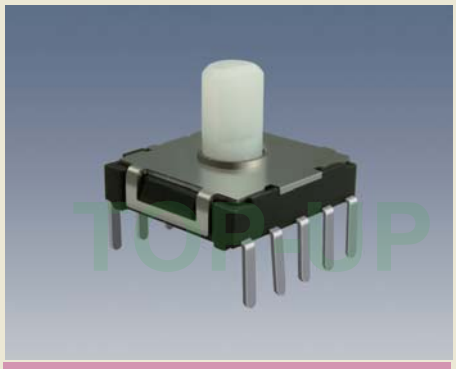

SRRM12B

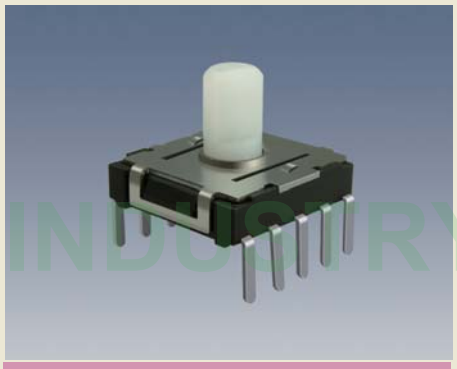

SRRM12B(HIGH TORQUE)

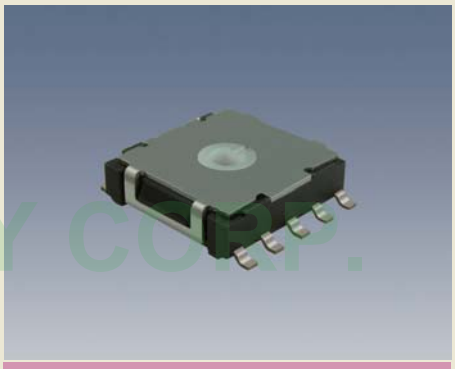

SRRM12SMT

Outline Drawing

SRRM12B

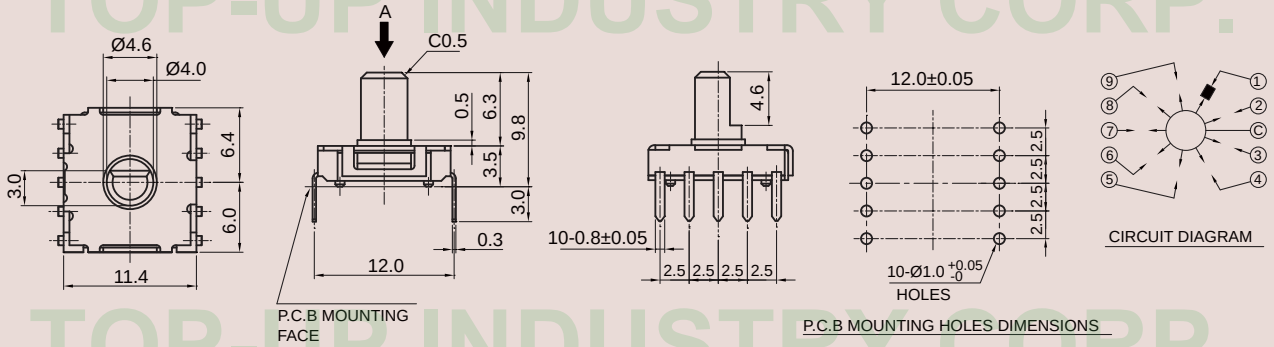

SRRM12B(HIGH TORQUE)

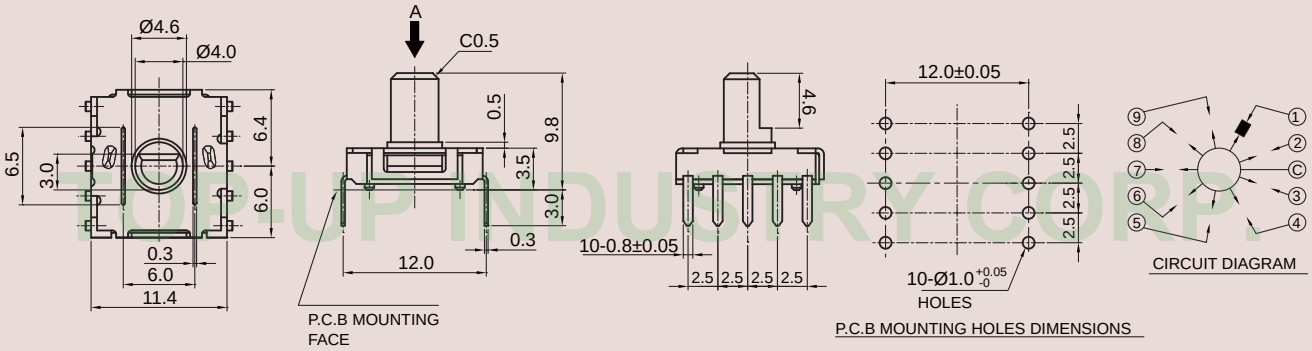

SRRM12SMT

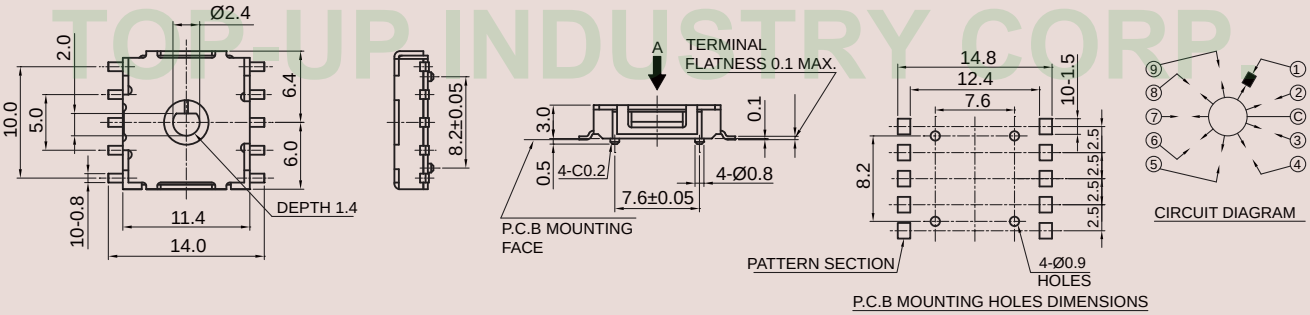

TOP-UP INDUSTRY CORP.

The drawings and specifications are for reference only. For further detail, please contact Top-up head office.

Rotary Switch SR15 / SR20 Series Code Explanation

SR15 □ - □ - □ □ - □ - Series NO.

Series Symbol

Code	Description
SR15	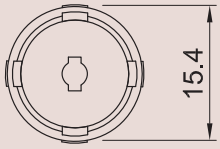
SR20	

Terminal

Code	Description
B	P.C.B

Pole - Position

Code	Description
0102	1 P 2 T
0108	1 P 8 T

Timing

Code	Description
S	Shorting
N	Non-Shorting

Shaft Type

Code	Description
K	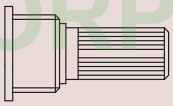
F	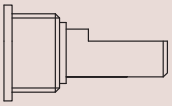

Shaft Length

TOP-UP INDUSTRY CORP.

The drawings and specifications are for reference only. For further detail, please contact Top-up head office.

SR15B

SR20B

SR20B(WITH SHAFT)

Outline Drawing

SR15B

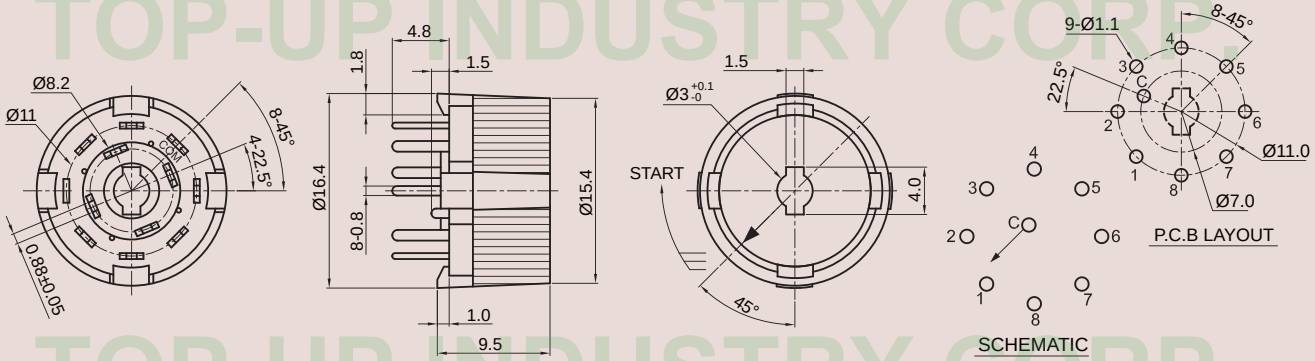

SR20B

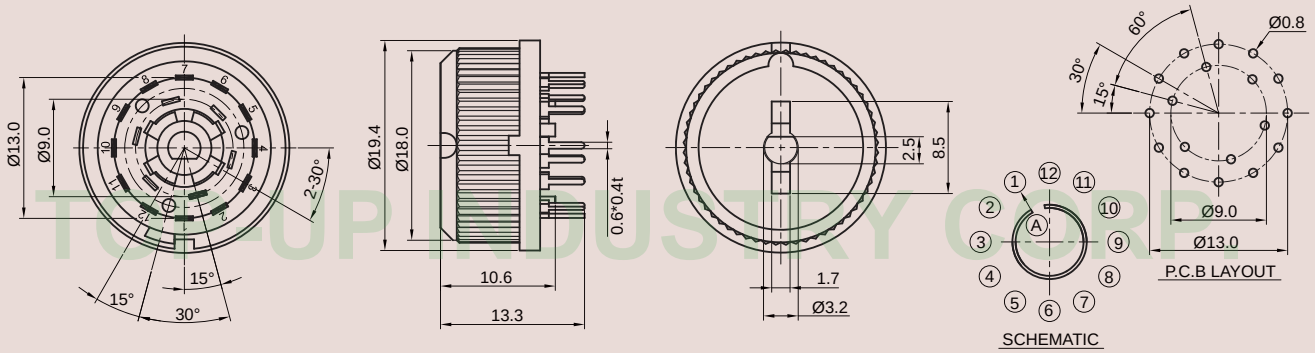

SR20B(WITH SHAFT)

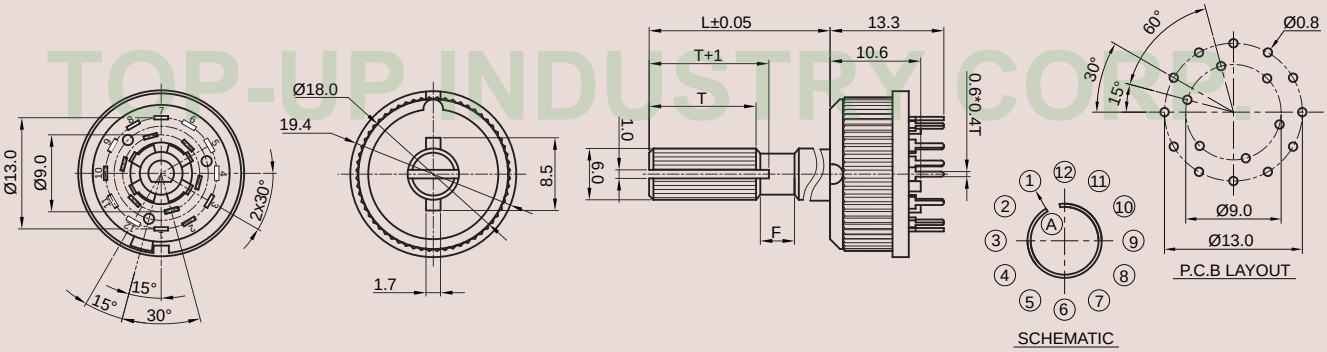

TOP-UP INDUSTRY CORP.

The drawings and specifications are for reference only. For further detail, please contact Top-up head office.

Rotary Switch SR17 Series Code Explanation

SR17 [ ] [ ] - [ ] - [ ] [ ] - [ ] - **Series NO.**

Series Symbol

Code	Description
SR17	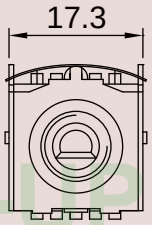

Terminal

Code	Description
B	P.C.B

Horizontal / Vertical

Code	Description
V	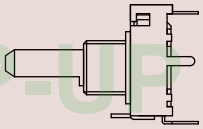
H	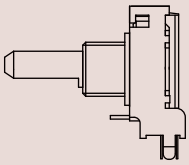

Timing

Code	Description
S	Shorting
N	Non-Shorting

Shaft Type

Code	Description
F	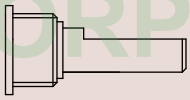

Shaft Length

Pole - Position

Code	Description
0108	1 P 8 T

TOP-UP INDUSTRY CORP.

The drawings and specifications are for reference only. For further detail, please contact Top-up head office.

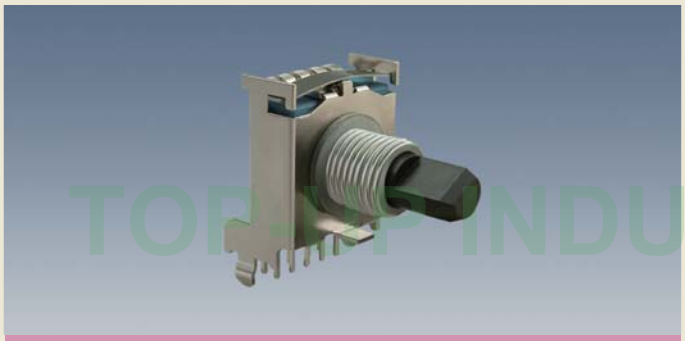

SR17BH

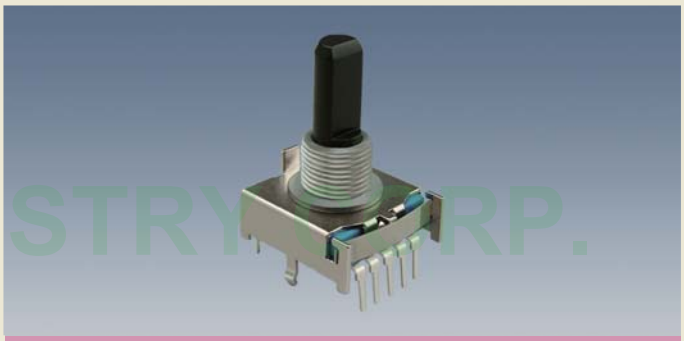

SR17BV

Outline Drawing

SR17BH

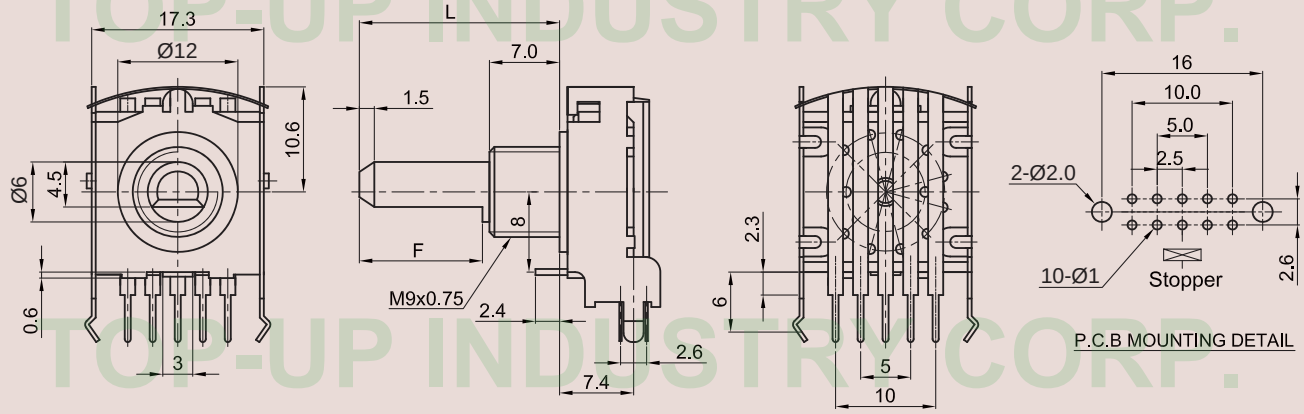

	1Pole	8Position							
Terminal NO.	1(10)	2	3	4	5	6	7	8	9

MODEL	15F	20F	25F
L	15	20	25
F	7	12	12

SR17BV

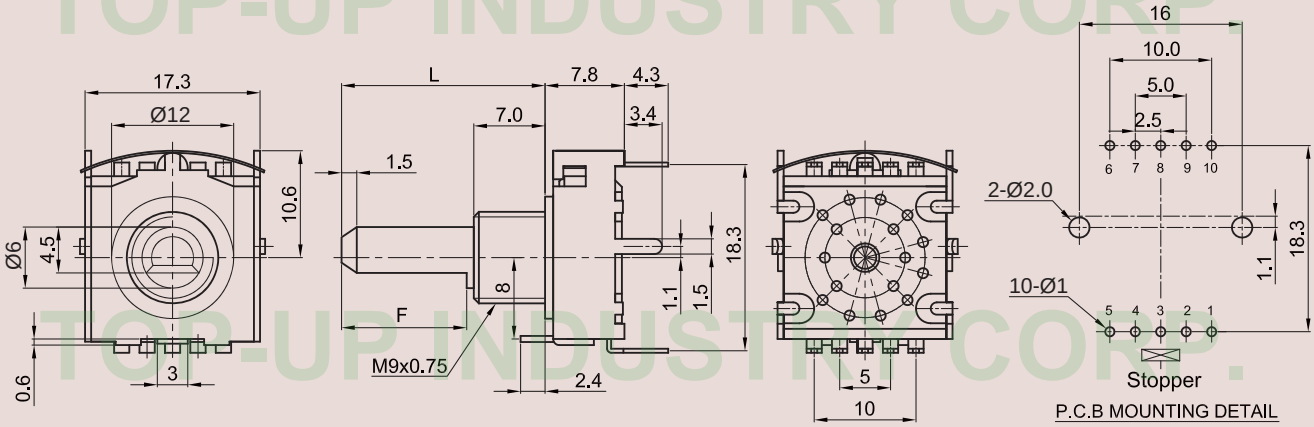

	1Pole	8Position							
Terminal NO.	1(10)	2	3	4	5	6	7	8	9

MODEL	15F	20F	25F
L	15	20	25
F	7	12	12

TOP-UP INDUSTRY CORP.

The drawings and specifications are for reference only. For further detail, please contact Top-up head office.

Rotary Switch SR19 / SR29 Series Code Explanation

SR19 [ ] [ ] - [ ] - [ ] [ ] - [ ] - Series NO.

Series Symbol

Code	Description
SR19	
SR29	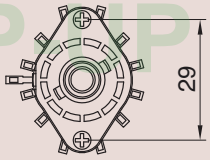
SR29A	
SR29B	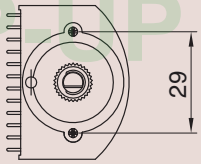
SR29C	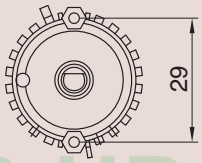

Section

Code	Description
Blank	1 Section
2	2 Section
4	4 Section

Terminal

Code	Description
A	Solder
B	P.C.B

Pole - Position

Code	Description
0102	1 P 2 T
0108	1 P 8 T

Shaft Length

Shaft Type

Code	Description
K	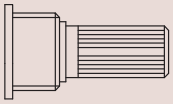
F	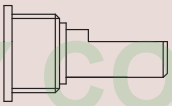

Timing

Code	Description
S	Shorting
N	Non-Shorting

TOP-UP INDUSTRY CORP.

The drawings and specifications are for reference only. For further detail, please contact Top-up head office.

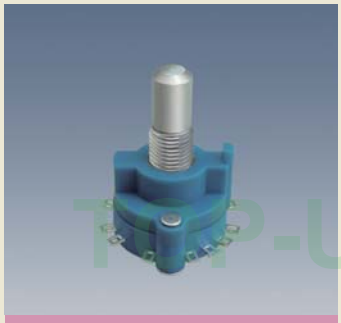

SR19A

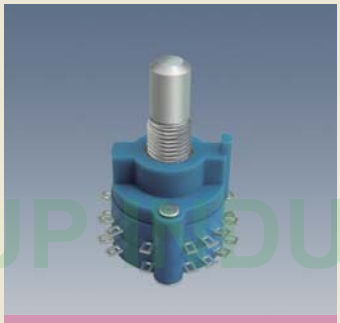

SR192A

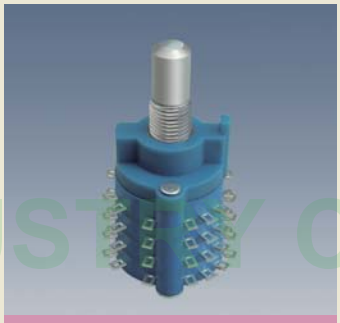

SR194A

SR196A

Outline Drawing

SR19A

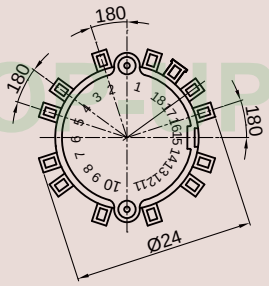

CHANGEOVER ANGLE=30°
Timing: Non-shorting(break before make)

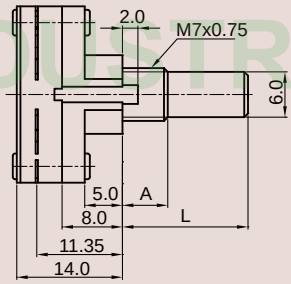

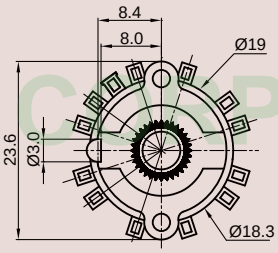

SR192A

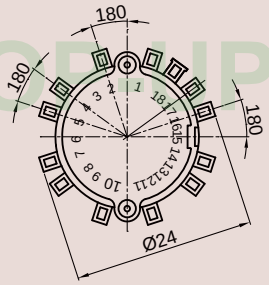

CHANGEOVER ANGLE=30°
Timing: Non-shorting(break before make)

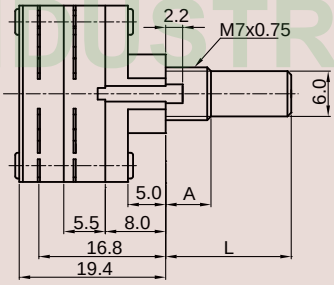

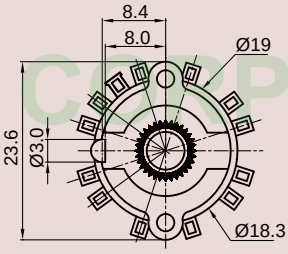

SR194A

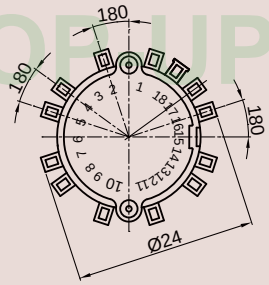

CHANGEOVER ANGLE=30°
Timing: Non-shorting(break before make)

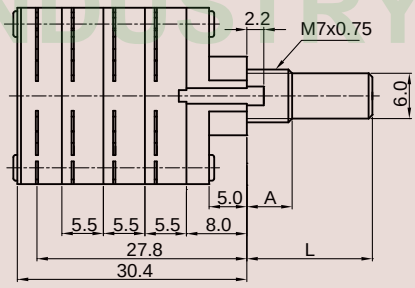

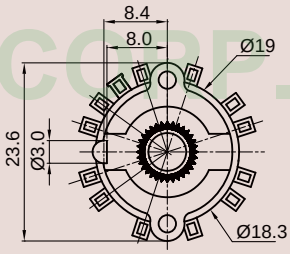

SR196A

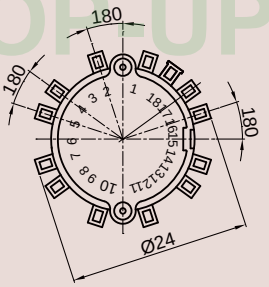

CHANGEOVER ANGLE=30°
Timing: Non-shorting(break before make)

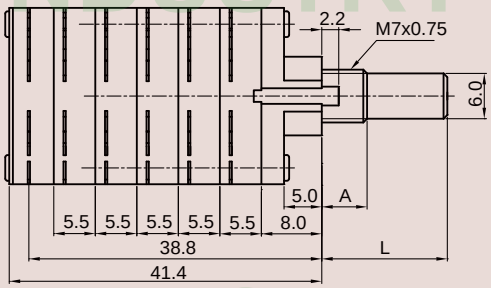

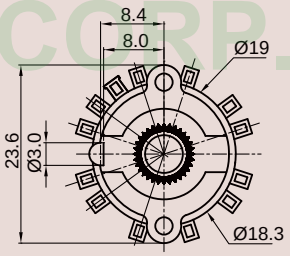

TOP-UP INDUSTRY CORP.

The drawings and specifications are for reference only. For further detail, please contact Top-up head office.

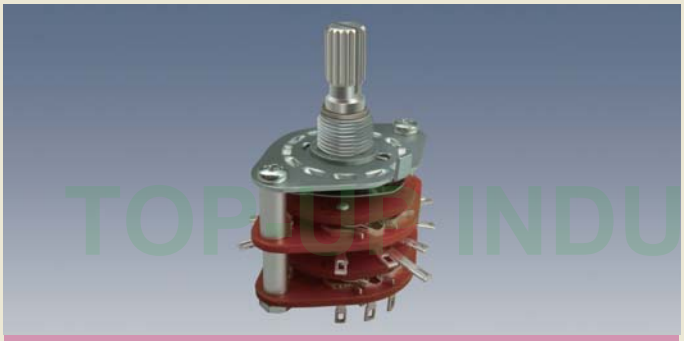

SR292A

SR29A2A

Outline Drawing

SR292A

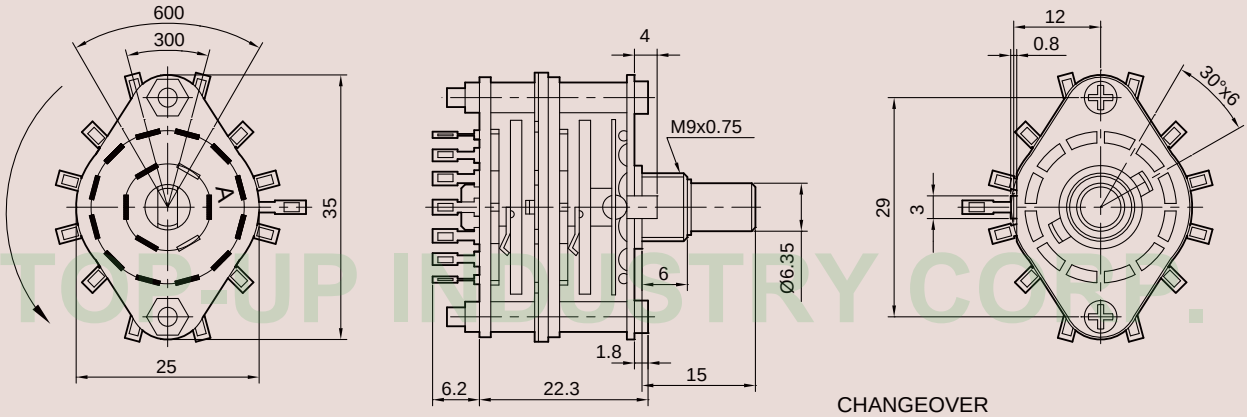

CHANGEOVER ANGLE=30°Timing:Shorting(make before break)

SR29A2A

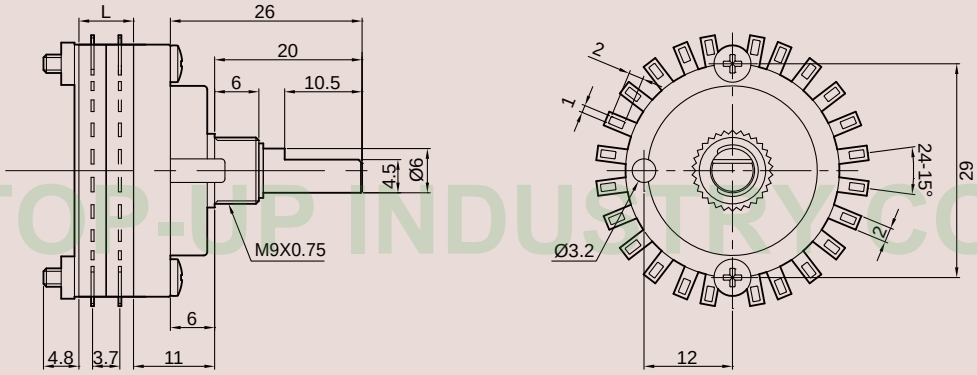

CHANGEOVER ANGLE=15°

Timing: ① Shorting(make before break)

② Non-Shorting(break before make)

TOP-UP INDUSTRY CORP.

The drawings and specifications are for reference only. For further detail, please contact Top-up head office.

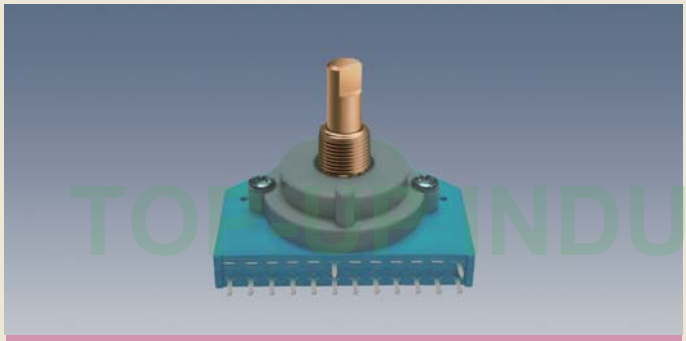

SR29B2B

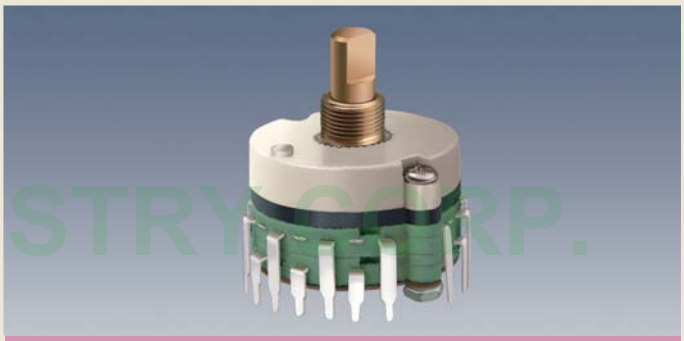

SR29C2B

Outline Drawing

SR29B2B

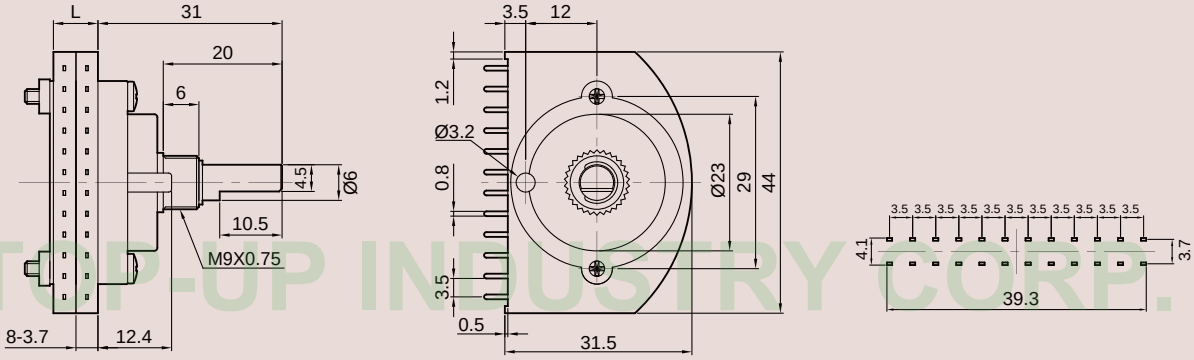

Timing: ① Shorting(make before break)
② Non-Shorting(break before make)

SR29C2B

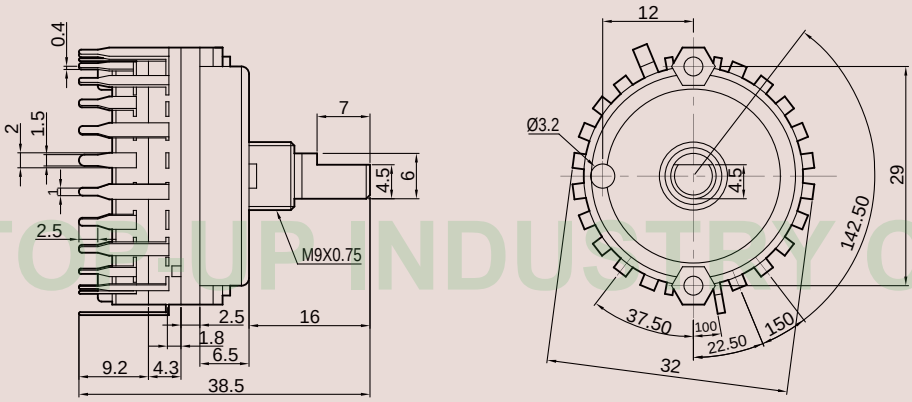

CHANGEOVER ANGLE=15°
Timing: ① Shorting(make before break)
② Non-Shorting(break before make)

The drawings and specifications are for reference only. For further detail, please contact Top-up head office.

TOP-UP INDUSTRY CORP.

Rotary Switch SR□ Series Code Explanation

SR □ □ □ - □ - □ □ □ □ - □ - Series NO.

Series Symbol

Code	Description
SR9	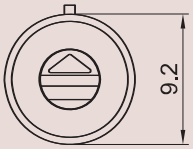
SR206A SR206B	A: 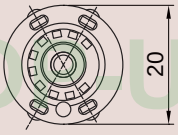 B: 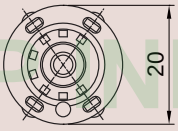
SR24	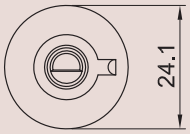
SR25	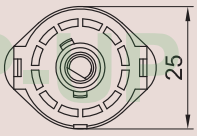
SR26	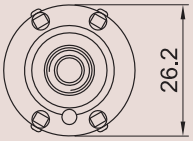
SR30	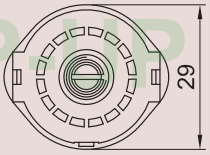
SR35	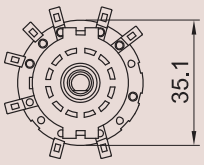

Rotational Angle

Code	Description
N	Endless

Terminal

Code	Description
A	SOLDER
B	P.C.B TYPE

Pole - Position

Code	Description
0102	1 P 2 T
0108	1 P 8T

Shaft Length

Shaft Diameter

Code	Description
Blank	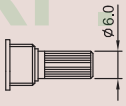
D	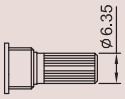

Bushing Type

Code	Description
Blank	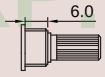
8	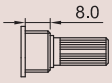
8E	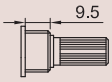
8G	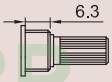

Timing

Code	Description
S	Shorting
N	Non-shorting

Shaft Type

F-Type			K-Type	R-Type
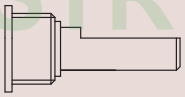			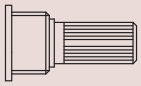	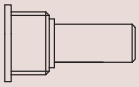
SR25 Series				
F	F3	F5		

TOP-UP INDUSTRY CORP.

The drawings and specifications are for reference only. For further detail, please contact Top-up head office.

SR9B

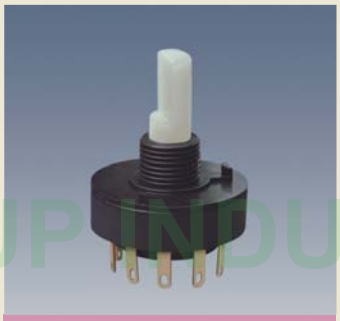

SR24A

SR26A

SR26B

Outline Drawing

SR9B

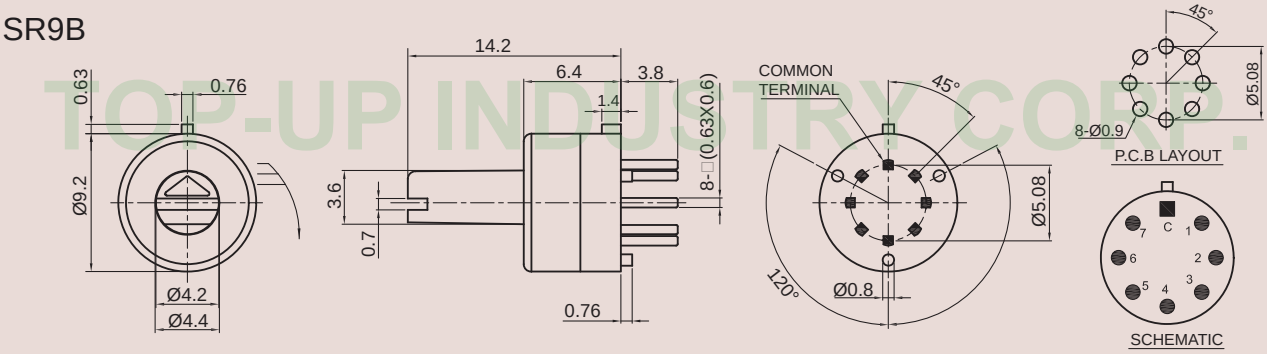

SR24A

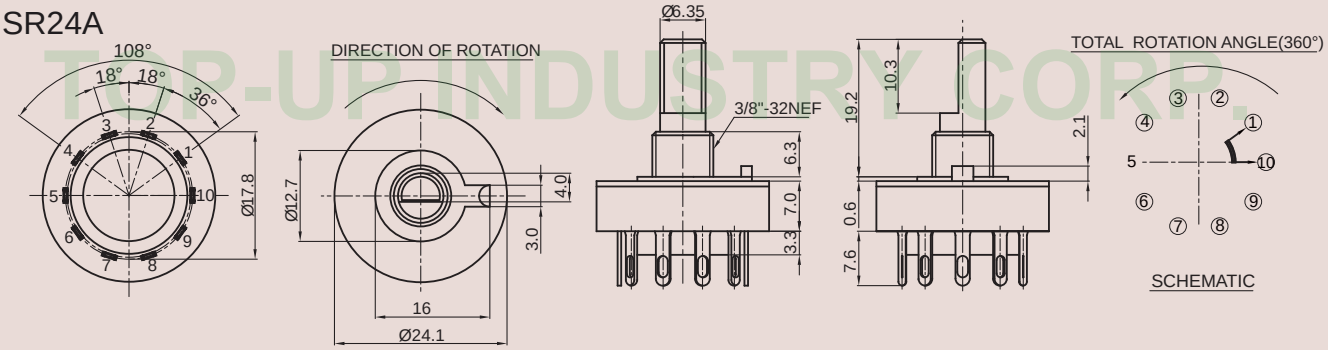

SR26A

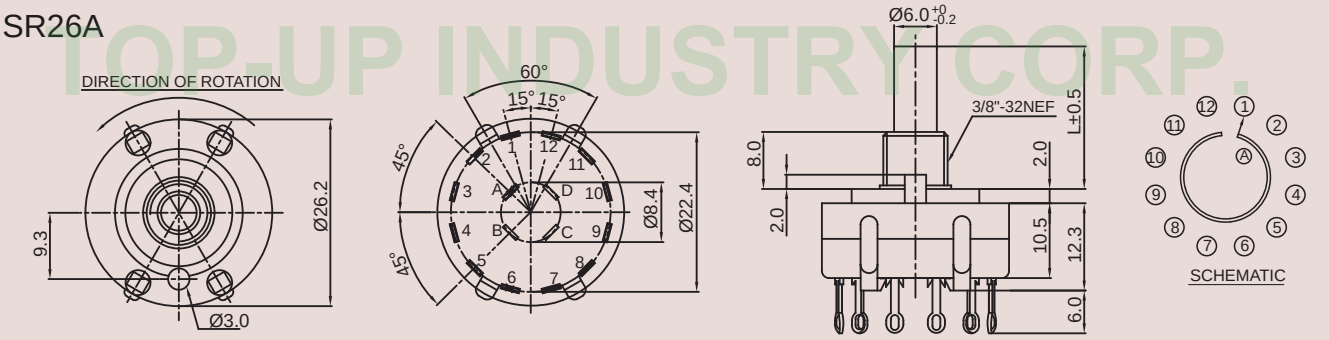

SR26B

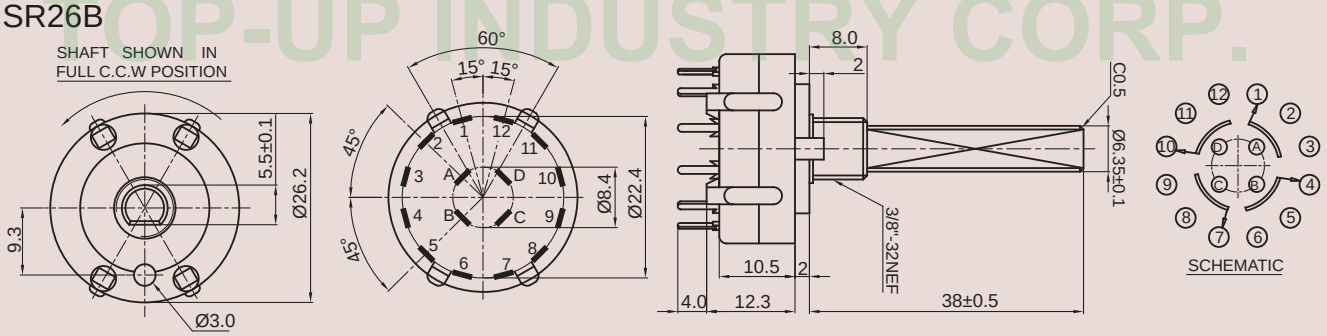

TOP-UP INDUSTRY CORP.

The drawings and specifications are for reference only. For further detail, please contact Top-up head office.

SR206AA

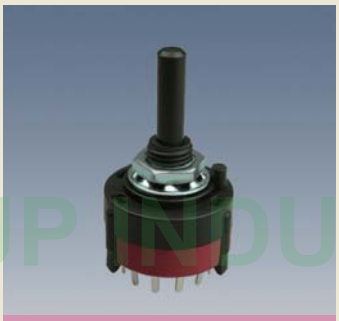

SR206AB

SR206BA

SR206BB

Outline Drawing

SR206AA

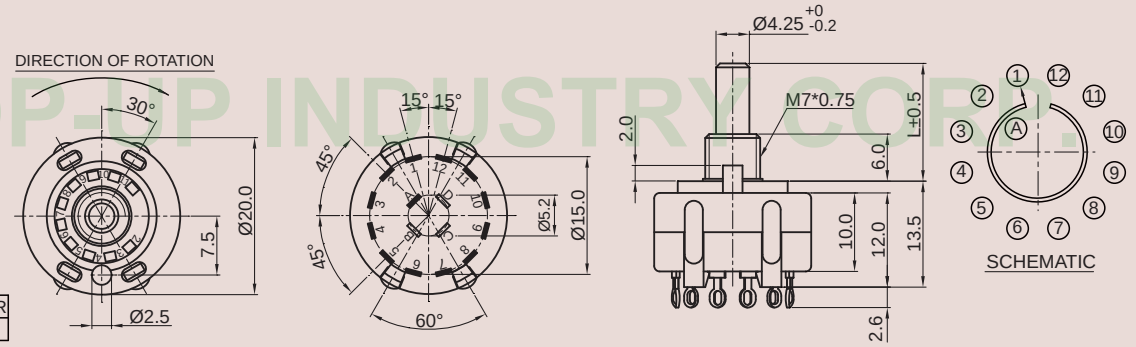

SHAFT LENGTH:

CODE	15R	20R	25R
L	15	20	25

SR206AB

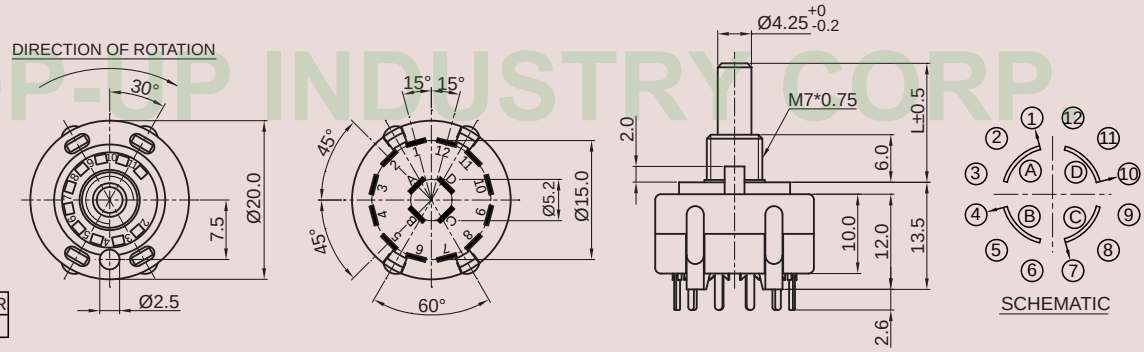

SHAFT LENGTH:

CODE	15R	20R	25R
L	15	20	25

SR206BA

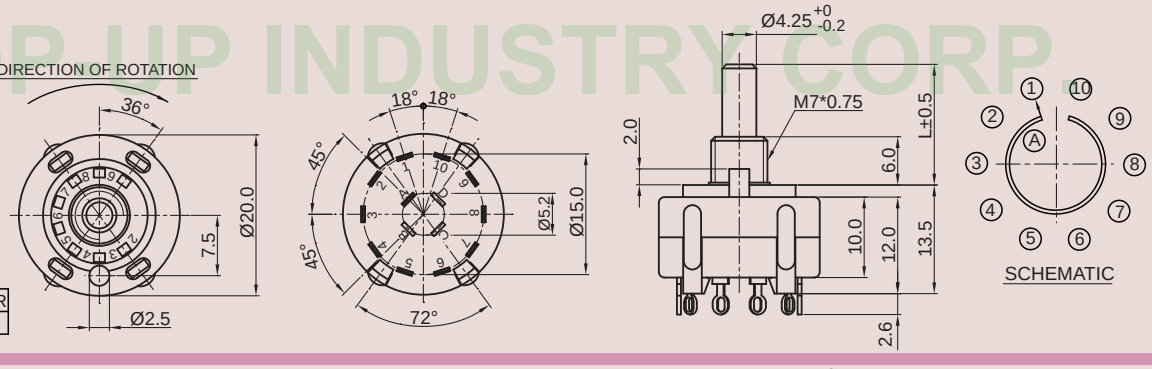

SHAFT LENGTH:

CODE	15R	20R	25R
L	15	20	25

SR206BB

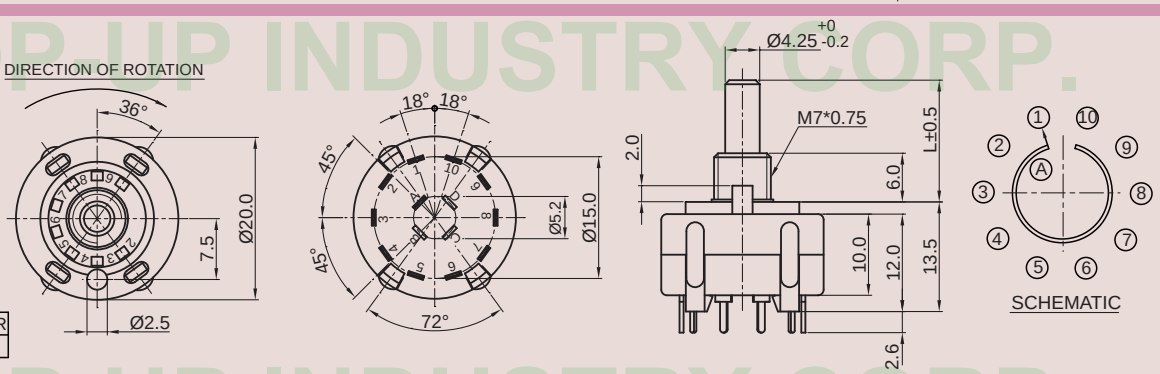

SHAFT LENGTH:

CODE	15R	20R	25R
L	15	20	25

TOP-UP INDUSTRY CORP.

The drawings and specifications are for reference only. For further detail, please contact Top-up head office.

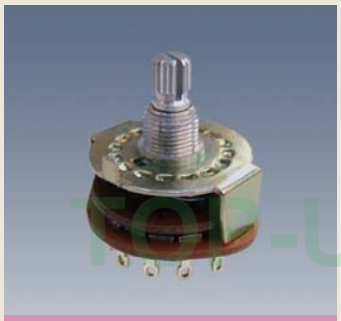

SR25A

SR25B

SR30B

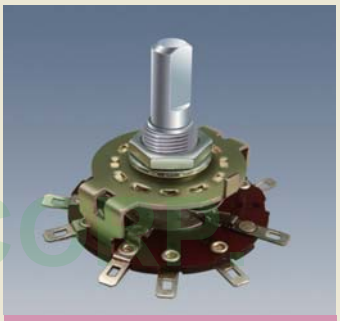

SR35A

Outline Drawing

SR25A

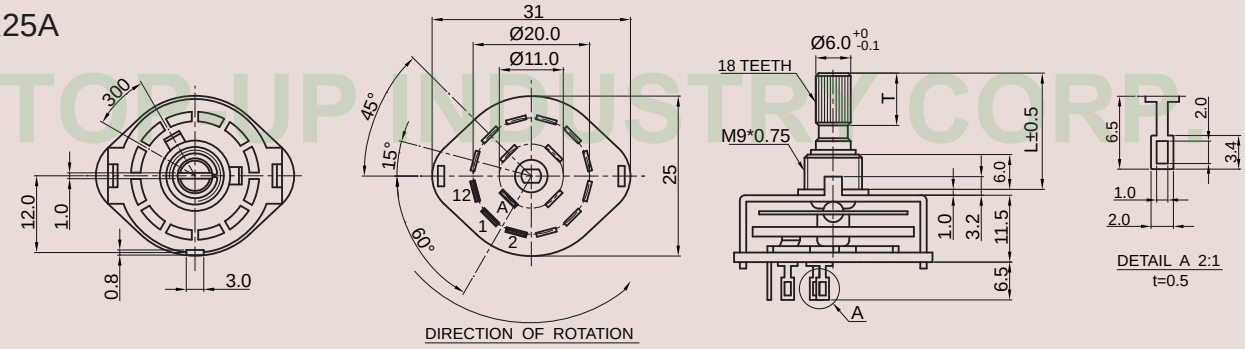

SR25B

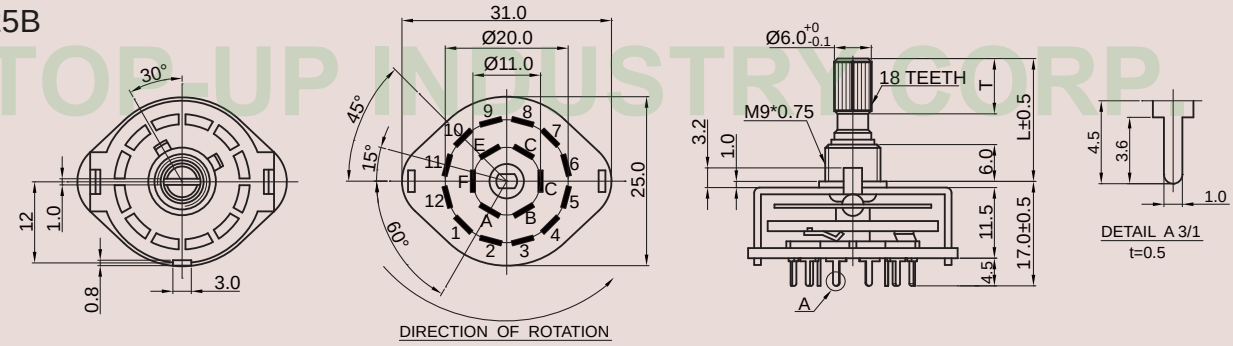

SR30B

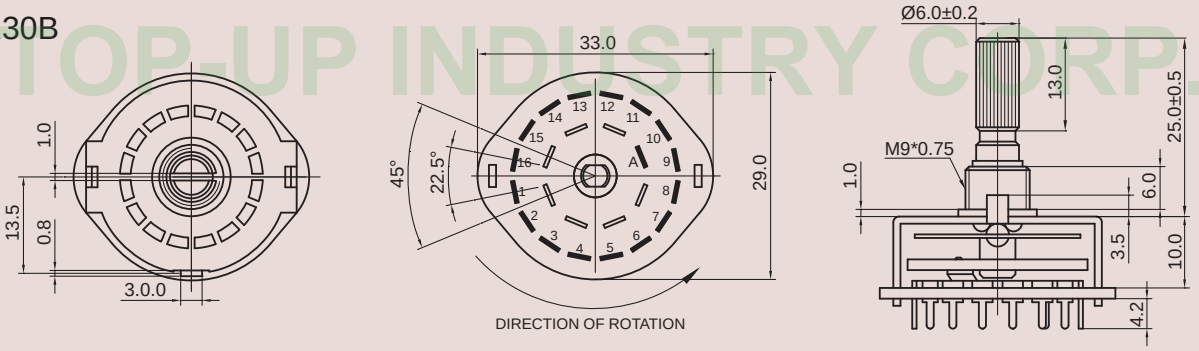

SR35A

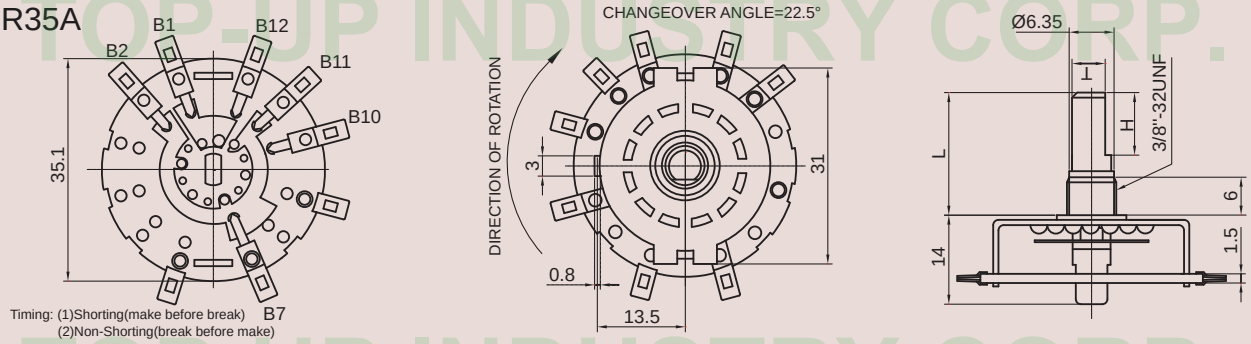

TOP-UP INDUSTRY CORP.

The drawings and specifications are for reference only. For further detail, please contact Top-up head office.

TOP-UP LED Push Button Switch PBS□Series Code Explanation

PBS□-□□□-□□□-□-□-Series NO.

Frame Type

Code	Description
S	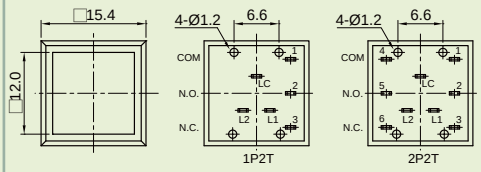
B	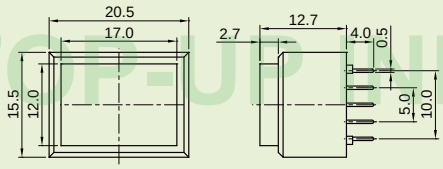
H	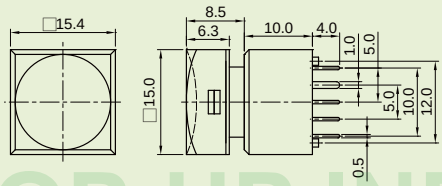
L	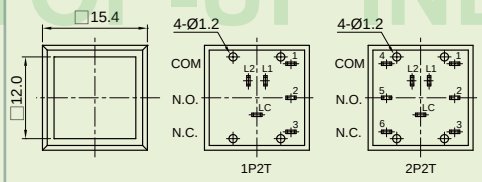
HB	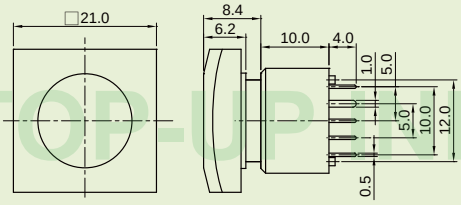
E	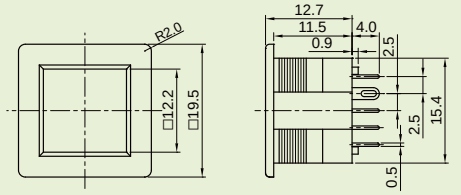

Pole

Code	Description
1	1 POLE
2	2 POLE

Position

Code	Description
1	1 POSITION
2	2 POSITION

Terminal

Code	Description
A	SOLDER
B	P.C.B TYPE

LED Color

Code	Description
BL	Blue
GR	Green
R	Red
Y	Yellow
RGB	FULL COLOR
BLANK	WITHOUT

WITH LED

Operation

Code	Description
N	NON-LOCK
L	LOCK

CONTACT MATERIAL

Code	Description
Q	MOVING CONTACTS: COPPER GOLD PLATED. TERMINALS: SILVER PLATED. FIXED CONTACTS: BRASS ,SILVER PLATED. RATING: 25V DC ,500mA.
R	MOVING CONTACTS: COPPER GOLD PLATED. TERMINALS: COPPER GOLD PLATED. RATING: 28V DC ,100mA.

TOP-UP INDUSTRY CORP.

The drawings and specifications are for reference only. For further detail, please contact Top-up head office.

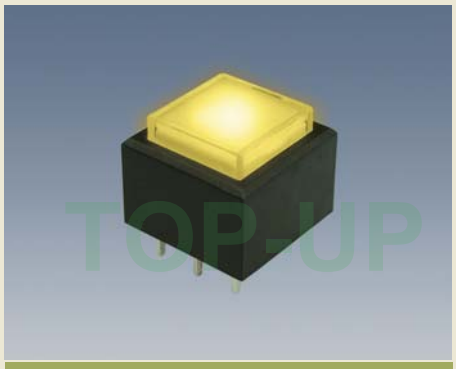

PBSS-12B / PBSS-22B

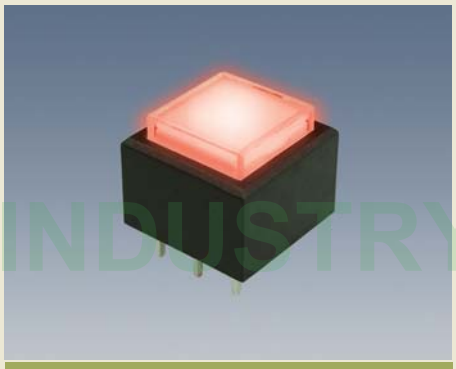

PBSL-12B / PBSL-22B

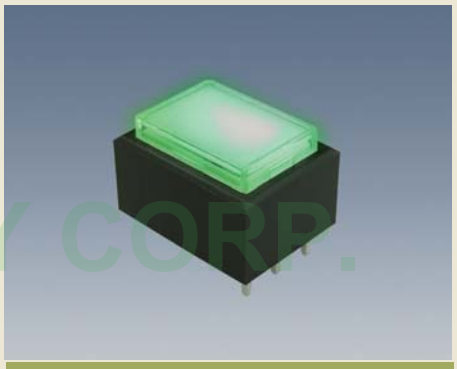

PBSB-12B / PBSB-22B

Outline Drawing

PBSS-12B

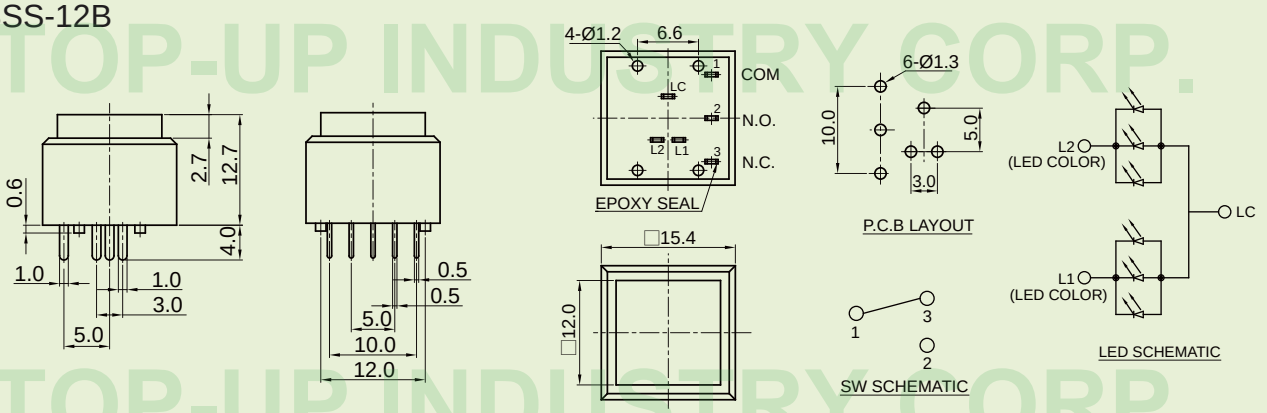

PBSL-12B

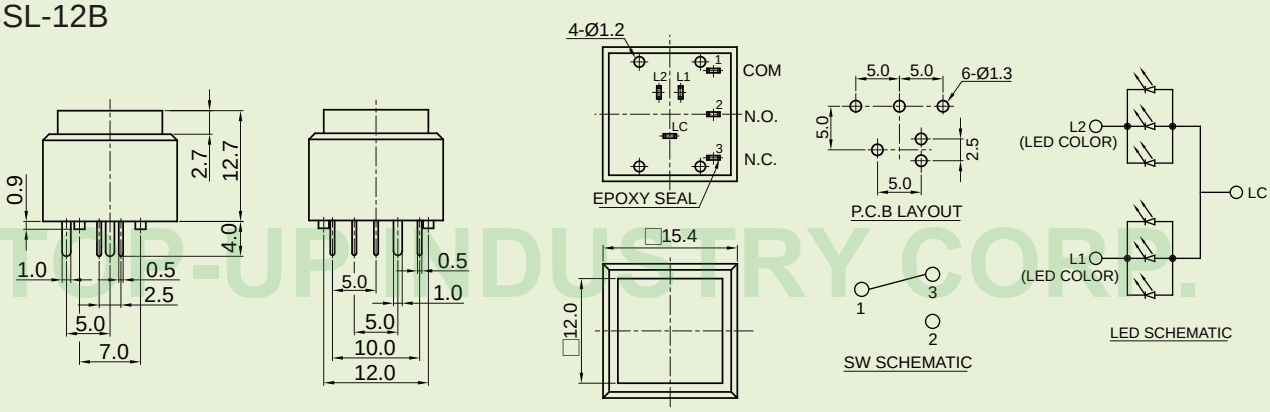

PBSB-12B

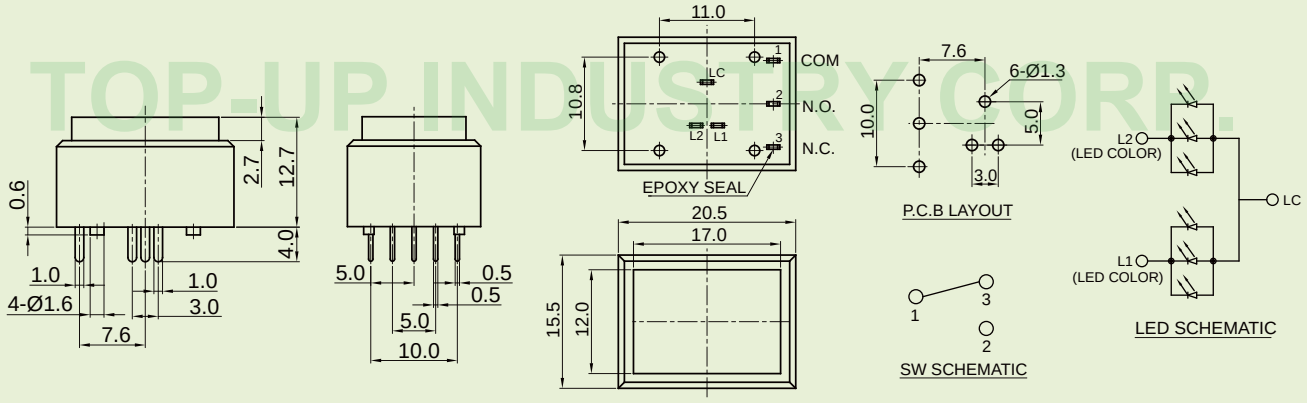

The drawings and specifications are for reference only. For further detail, please contact Top-up head office.

TOP-UP INDUSTRY CORP.

PBSH-12B / PBSH-22B

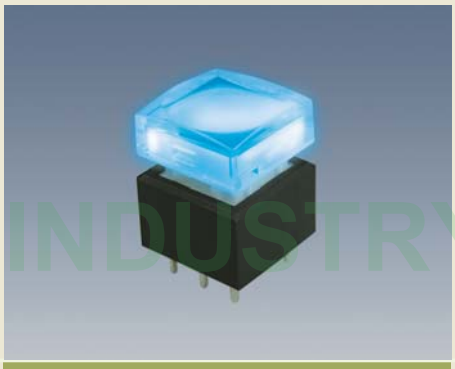

PBSH-22B-LRGB

PBSHB-12B / PBSHB-22B

Outline Drawing

PBSH-12B

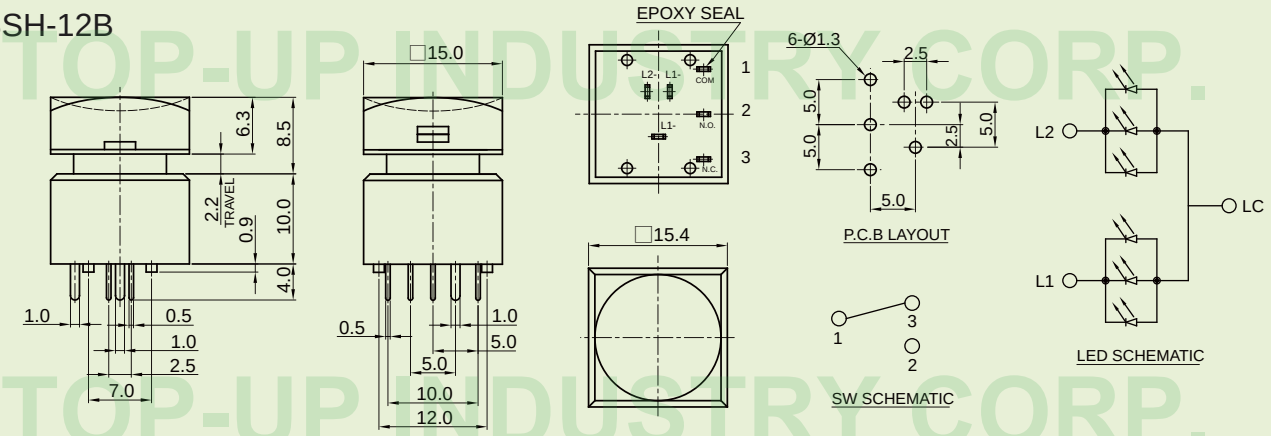

PBSH-22B-LRGB

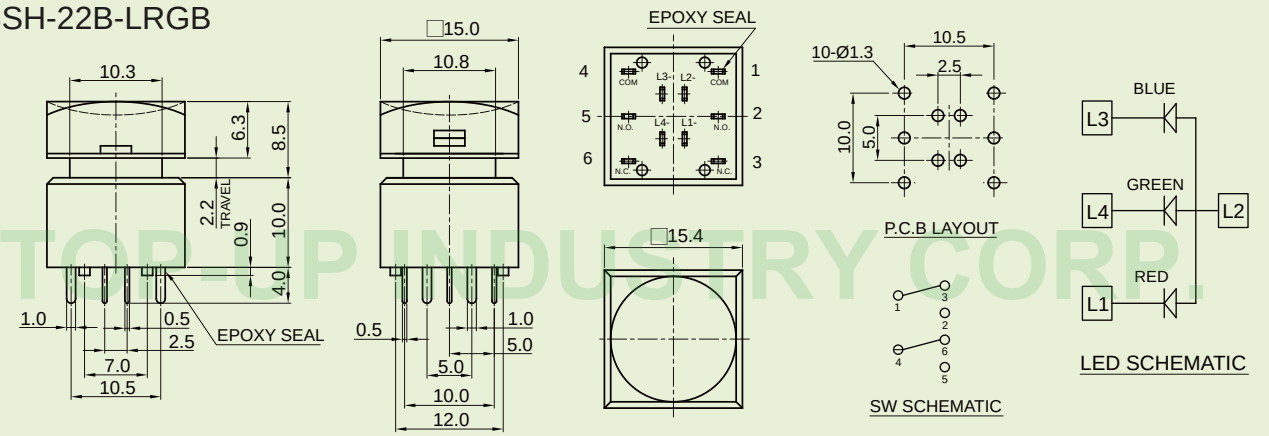

PBSHB-12B

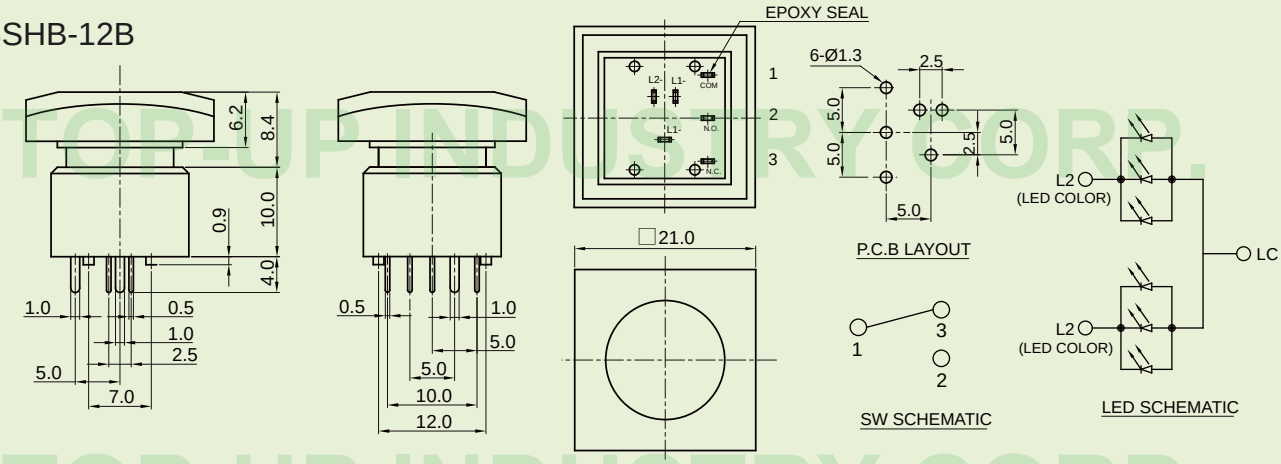

TOP-UP INDUSTRY CORP.

The drawings and specifications are for reference only. For further detail, please contact Top-up head office.

TOP-UP LED Push Button Switch PB01 Series Code Explanation

PB01 - □ □ - □ □ □ - □ - Series NO.

Series Symbol

Code	Description
PB01	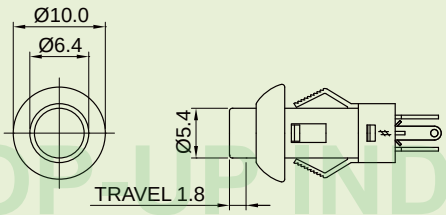

Pole

Code	Description
1	1 POLE

Position

Code	Description
1	1 POSITION

Terminal

Code	Description
A	SOLDER

LED Color

Code	Description
BL	Blue
GR	Green
R	Red
Y	Yellow
BLANK	WITHOUT

WITH LED

Operation

Code	Description
N	NON-LOCK
L	LOCK

TOP-UP INDUSTRY CORP.

The drawings and specifications are for reference only. For further detail, please contact Top-up head office.

PB01

Features

- LED illumination , Two colors available.
- Snap in Panel Mount installation.
- Single pole.
- Single throw , Momentary.

Applications

- Automative Industry.
- Office appliance.
- Computer Products.
- Communication Equipments.

Outline Drawing

PB01

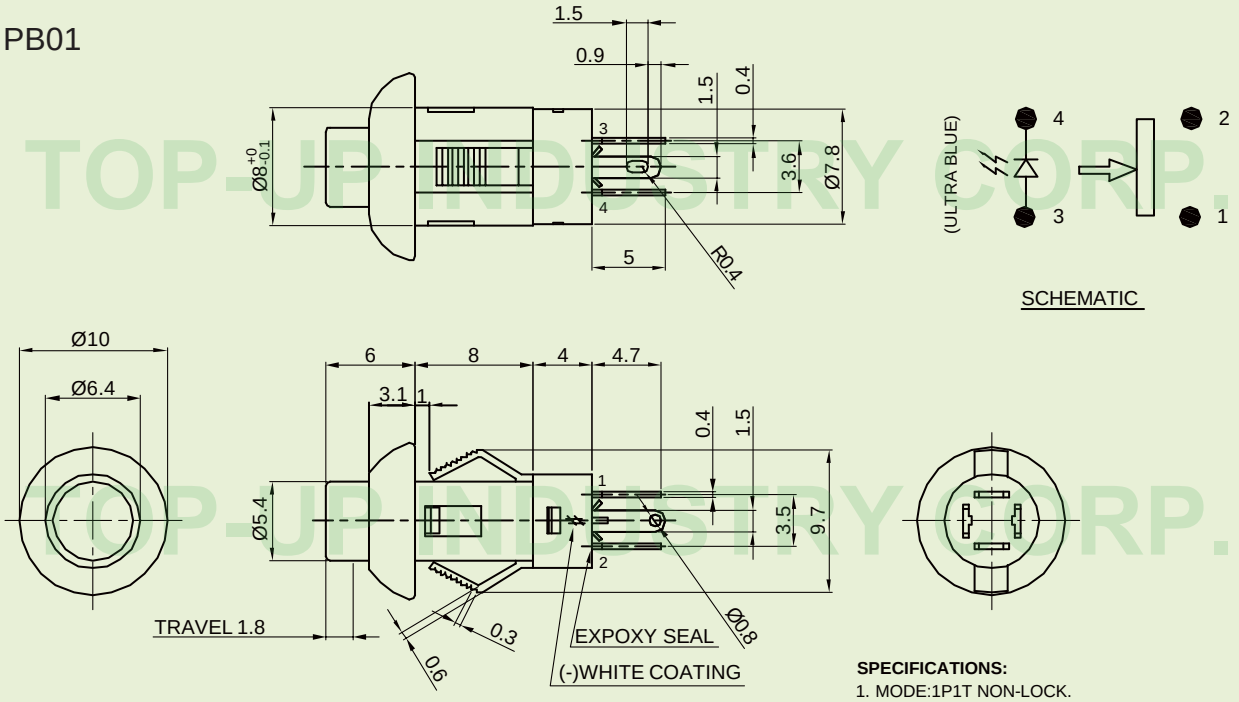

SPECIFICATIONS:

1. MODE:1P1T NON-LOCK.
2. RATING: 30V DC,100mA
3. INSULATION RESISTANCE: 500V DC, 100M Ω.
4. OPERATING TEMPERATURE: -40°C~+85°C.
5. OPERATING FORCE: 250 ±100gf.
6. MECHANICAL LIFE:50,000 CYCLES.

TOP-UP INDUSTRY CORP.

The drawings and specifications are for reference only. For further detail, please contact Top-up head office.

Push Switch PSV Series Code Explanation

PSV - □ □ - □ - □ □ □ □ - □ - Series NO.

Series Symbol

Code	Description
PS5.8V	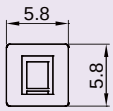
PSV	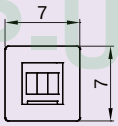
PS8V	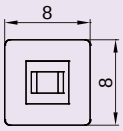
PS8.5V	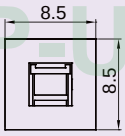
PS13.4*8.8V	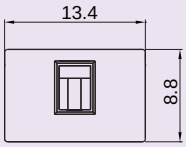

Pole - Position

Code	Description
22	2 P 2T
42	4 P 2T

Travel

Code	Description	
	Travel	Total Travel
E	1.0	2.0
F	1.3	2.0
D	1.5	2.5
Z	2.5	3.3

Stem Length

Lock

Code	Description
L	Self Lock
N	Non - Lock

Terminal

Code	Description
	P.C.B TYPE
B	
BS	

LED Color

Code	Description
BL	Blue
W	White
R	Red
GR	Green
O	Orange

Operating Force

Code	Description
12	120 gf
14	140 gf
20	200 gf
25	250 gf

Timing

Code	Description
S	Shorting
N	Non - Shorting

TOP-UP INDUSTRY CORP.

The drawings and specifications are for reference only. For further detail, please contact Top-up head office.

PS8.5V-22B(WITH LED)

Features

- 1.3mm and 1.5mm travel.
- Support 2 poles and 4 poles.

Applications

- Applicable to all types of audio products,TV,VCR related devices and other home and industrial electronics apparatus types of changeover switches.

Outline Drawing

PS8.5V-22B
(WITH LED)

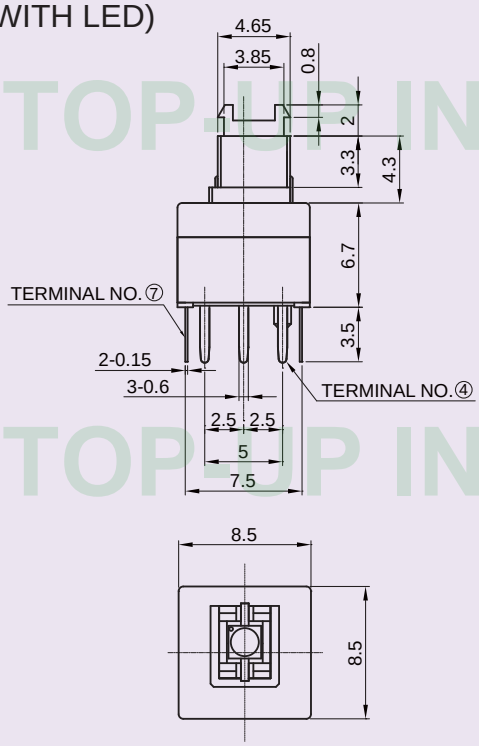

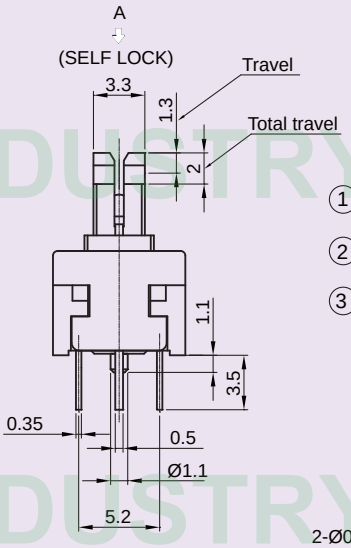

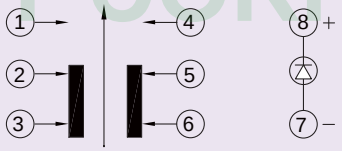

CIRCUIT DIAGRAM
VIEWED FROM THE DIRECTION A

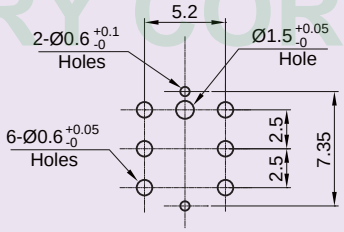

P.C.BOARD MOUNTING HOLE DIMENTION
ALL DIMENTION TOLERANCES ±0.05

TOP-UP INDUSTRY CORP.

The drawings and specifications are for reference only. For further detail, please contact Top-up head office.

PS5.8V-22B

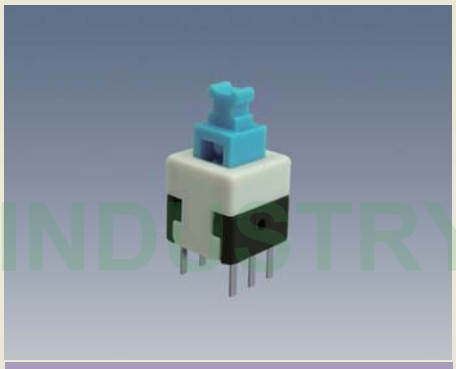

PSV-22B

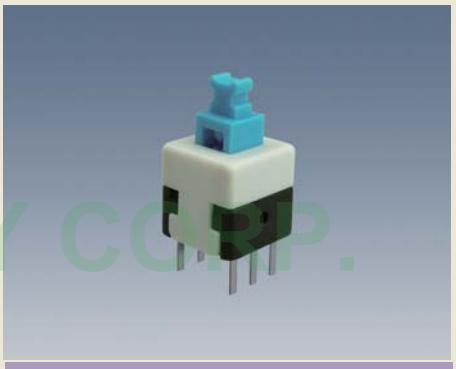

PS8V-22B

Outline Drawing

PS5.8V-22B

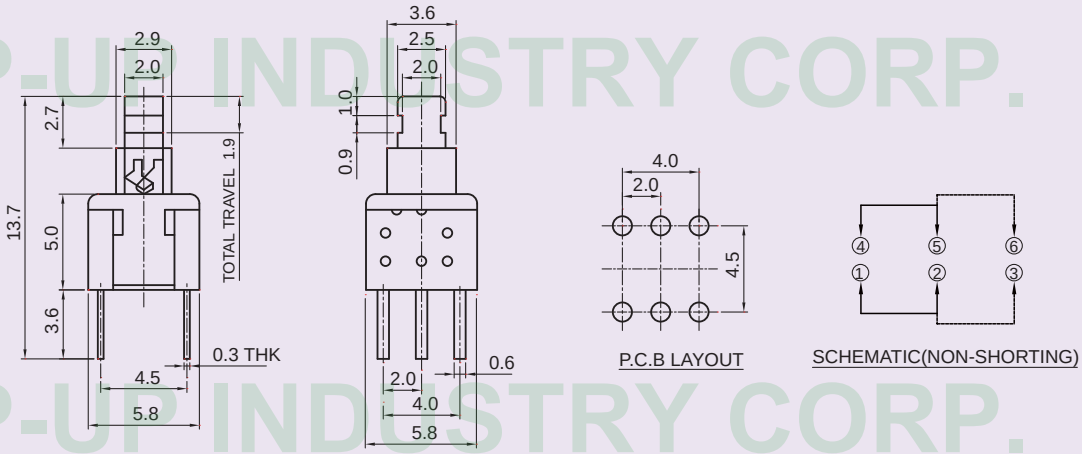

PSV-22B

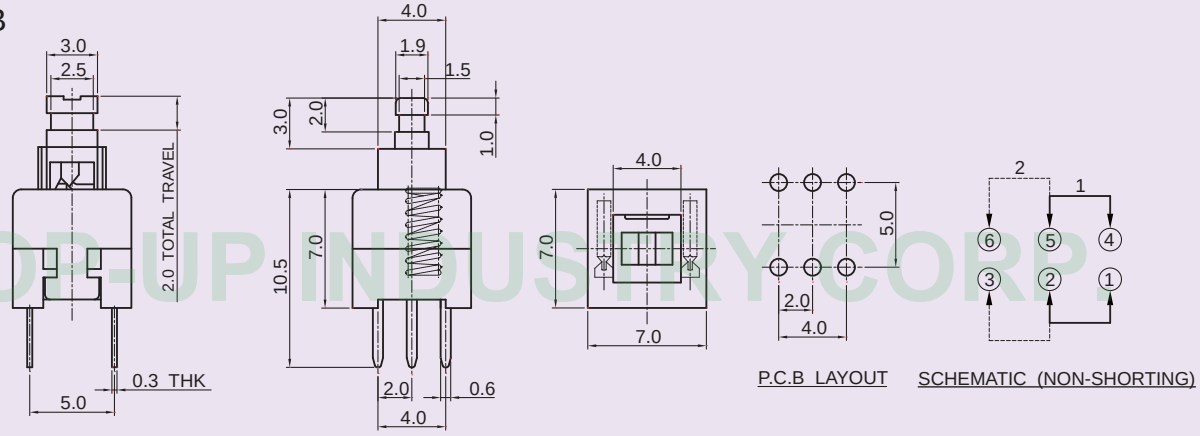

PS8V-22B

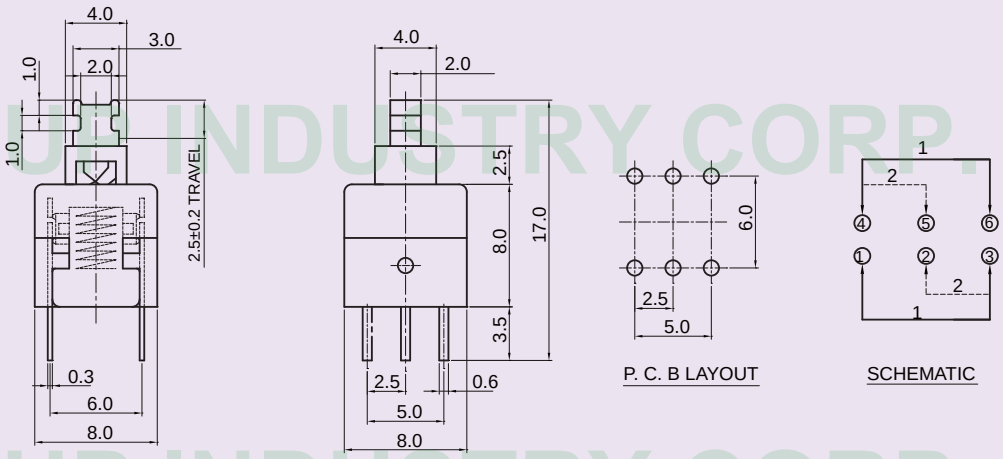

TOP-UP INDUSTRY CORP.

The drawings and specifications are for reference only. For further detail, please contact Top-up head office.

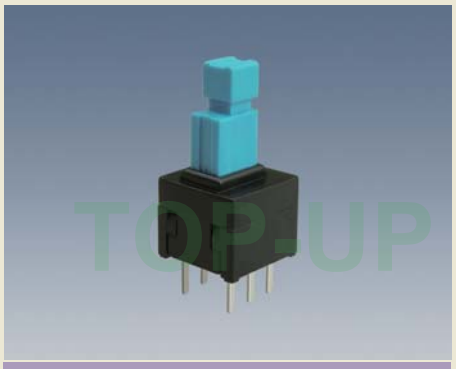

PS8.5V-22B

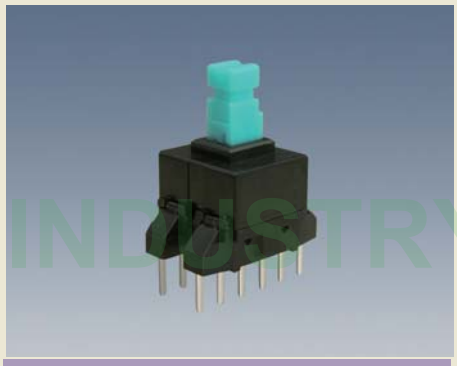

PS8.5V-42B

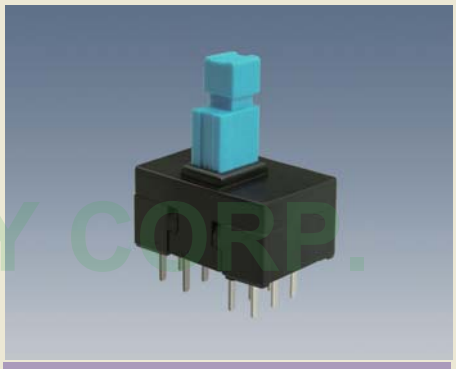

PS13.4X8.8V-42B

Outline Drawing

PS8.5V-22B

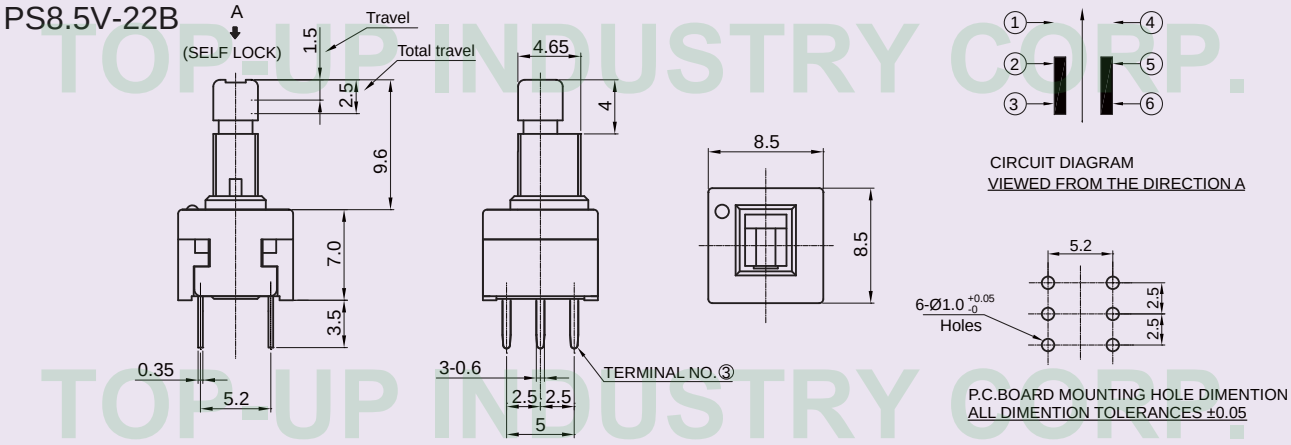

PS8.5V-42B

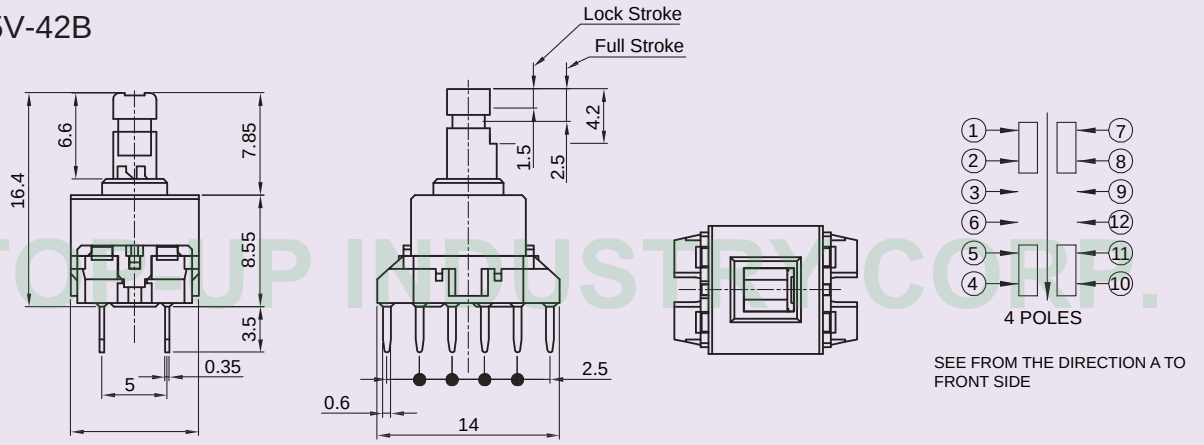

PS13.4X8.8V-42B

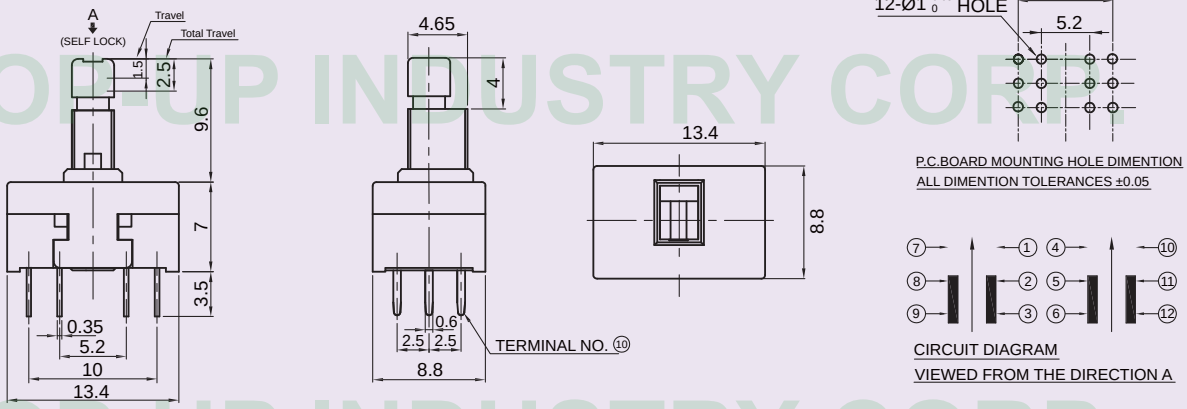

TOP-UP INDUSTRY CORP.

The drawings and specifications are for reference only. For further detail, please contact Top-up head office.

Push Switch PS1C Series Code Explanation

PS1C - [ ] [ ] - [ ] [ ] [ ] [ ] - [ ] - **Series NO.**

Series Symbol

Code	Description	
PS1C	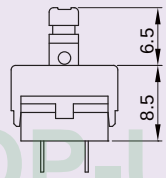 1.2mm Travel	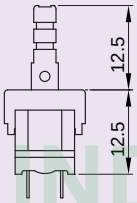 2.5mm Travel

Pole - Position

Code	Description
22	2 P 2 T
42	4 P 2 T

Terminal

Code	Description
	P.C.B TYPE
B	
BS	

Operating Force

Code	Operating Force
20	200gf
25	250gf
30	300gf

Lock

Code	Description
L	Self - LOCK
N	Non - LOCK

Travel

Code	Description	
	Travel	Total Travel
W	1.2	1.7
Z	2.5	3.4

Stem Length

Timing

Code	Description
S	Shorting
N	Non - Shorting

TOP-UP INDUSTRY CORP.

The drawings and specifications are for reference only. For further detail, please contact Top-up head office.

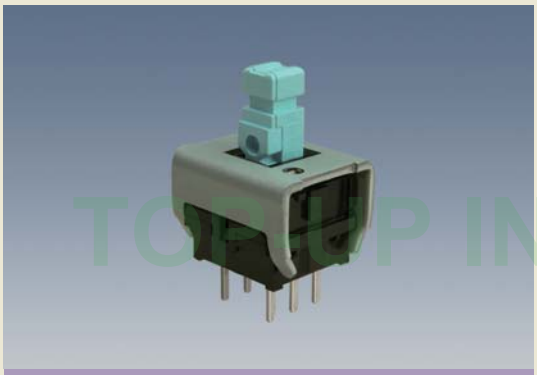

PS1C-22B-6.5WL

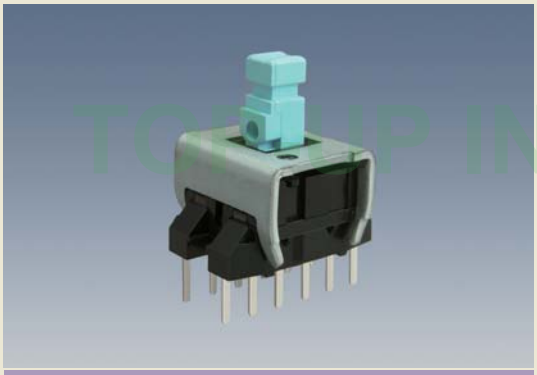

PS1C-42B-6.5WL

Features

- 1.5mm travel.
- 8.5mm in lever height from P.C.B.
- Support 2 poles and 4 poles.

Applications

- Audio system, TV, Mixer.
- Consumer electronics products, industrial electronic equipments.

TOP-UP INDUSTRY CORP.

Outline Drawing

PS1C-22B-6.5WL

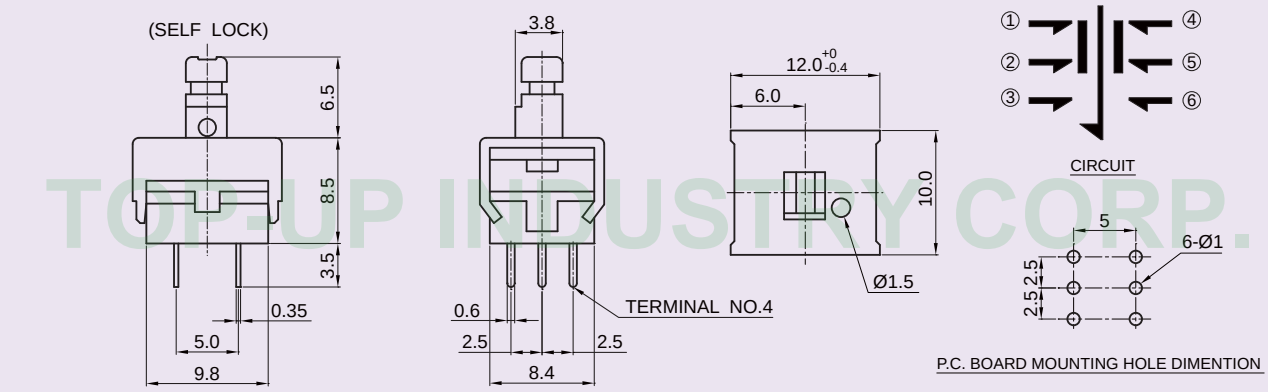

PS1C-42B-6.5WL

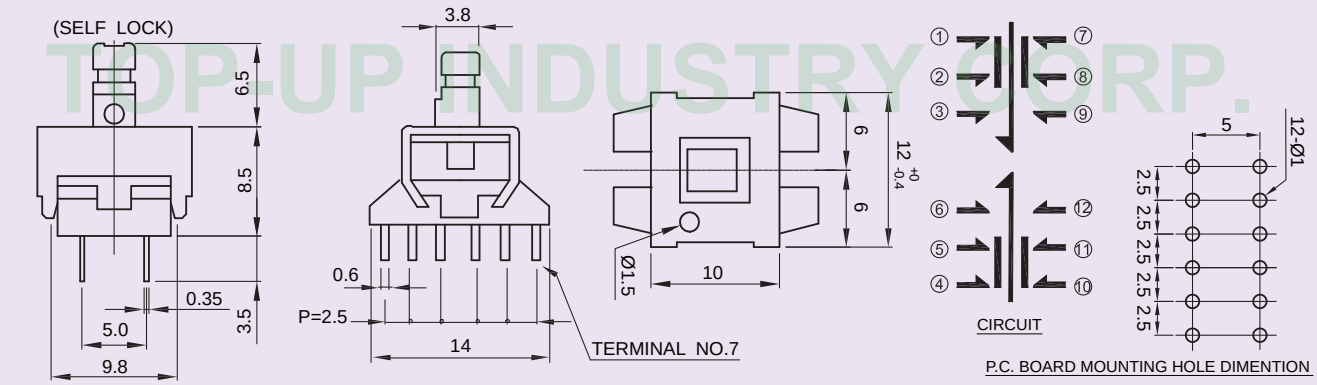

The drawings and specifications are for reference only. For further detail, please contact Top-up head office.

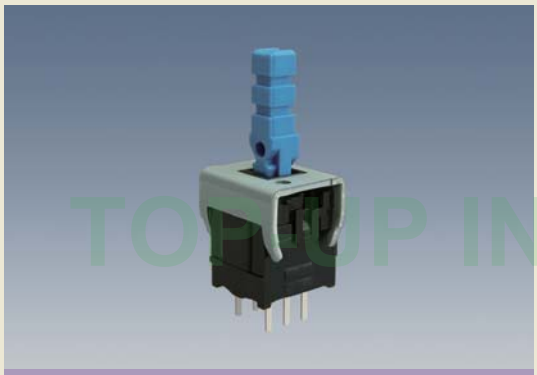

PS1C-22B-12.5ZL

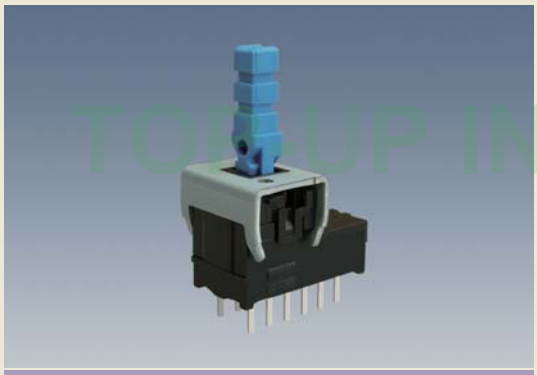

PS1C-42B-12.5ZL

Features

- 2.5mm travel.
- 12.5mm in lever height from P.C.B.
- Support 2 poles and 4 poles.

Applications

- Audio system, TV, Mixer.
- Consumer electronics products, industrial electronic equipments.

TOP-UP INDUSTRY CORP.

Outline Drawing

PS1C-22B-12.5ZL

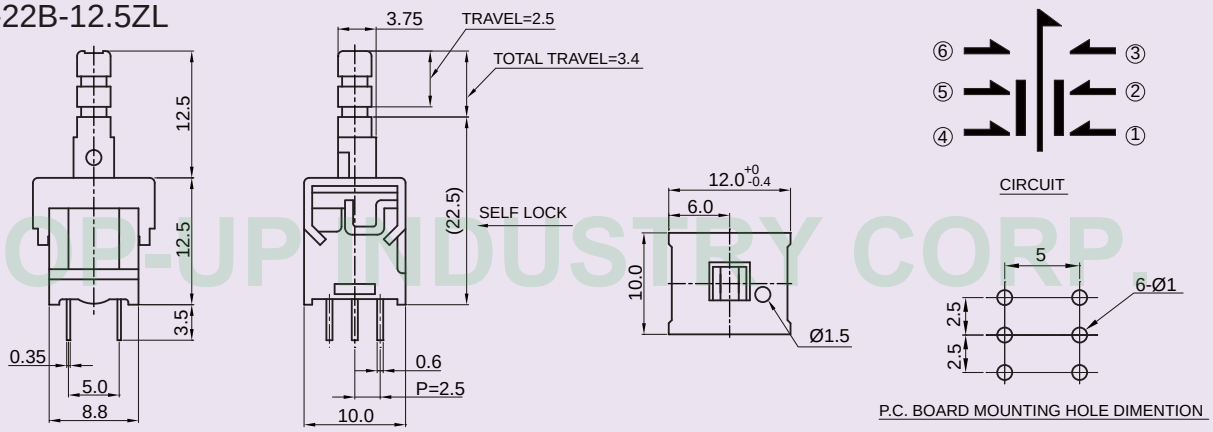

PS1C-42B-12.5ZL

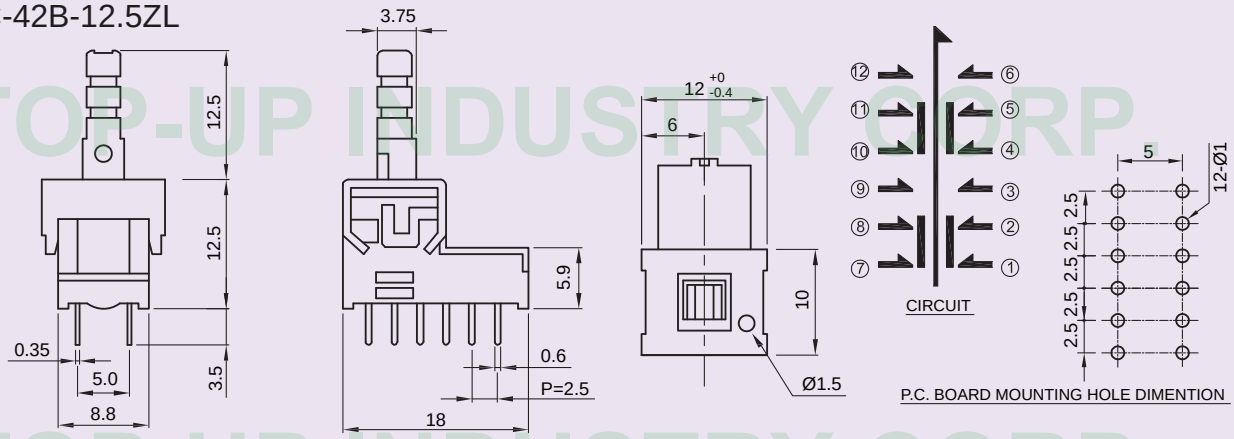

The drawings and specifications are for reference only. For further detail, please contact Top-up head office.

PS1A - □ □ - □ □ □ - □ - Series NO.

Series Symbol

Code	Description
PS1A	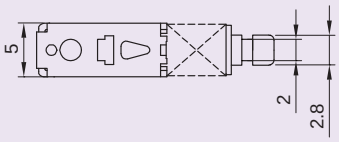
PS1A1	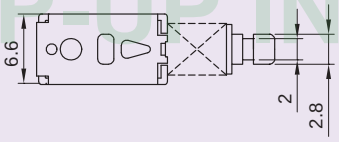
PS1A2	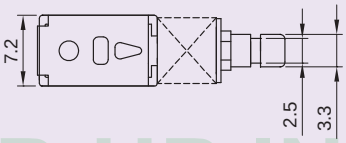

Pole - Position

Code	Description
12	1 P 2 T
22	2 P 2 T

Terminal

Code	Description
	P.C.B TYPE
B	

Lock

Code	Description
L	Self - Lock
N	Non - Lock

Travel

Code	Description	
	Travel	Total Travel
Z	2.5	3.5
	–	3.5

Stem Length

Timing

Code	Description
S	Shorting
N	Non - Shorting

TOP-UP INDUSTRY CORP.

The drawings and specifications are for reference only. For further detail, please contact Top-up head office.

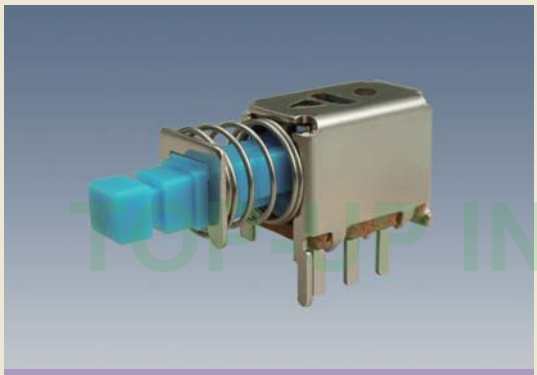

PS1A-12B

PS1A1-22B

Features

- 2.5mm travel.
- Printed wiring available.

Applications

- Audio system.
- AP Internet hardware.

TOP-UP INDUSTRY CORP.

Outline Drawing

PS1A-12B

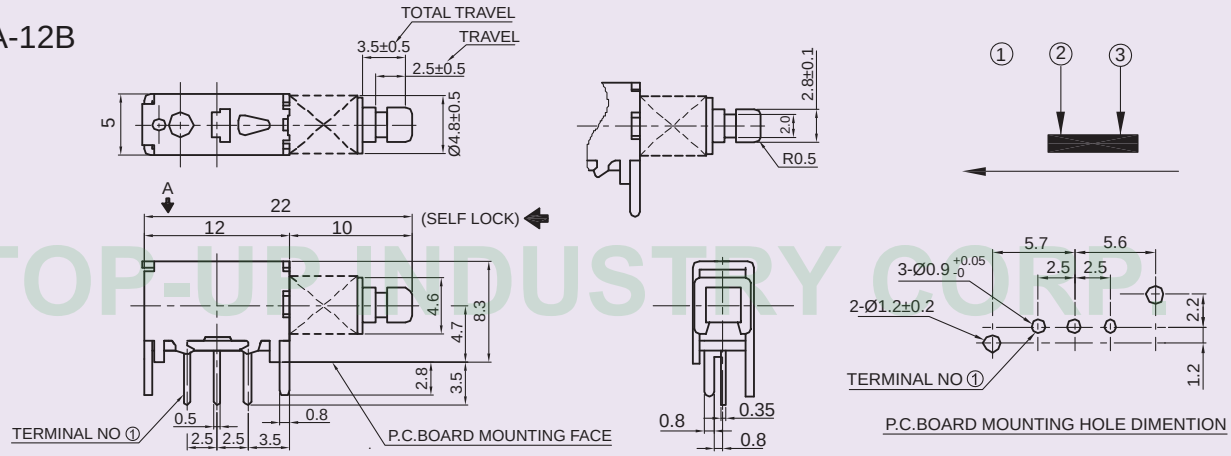

PS1A1-22B

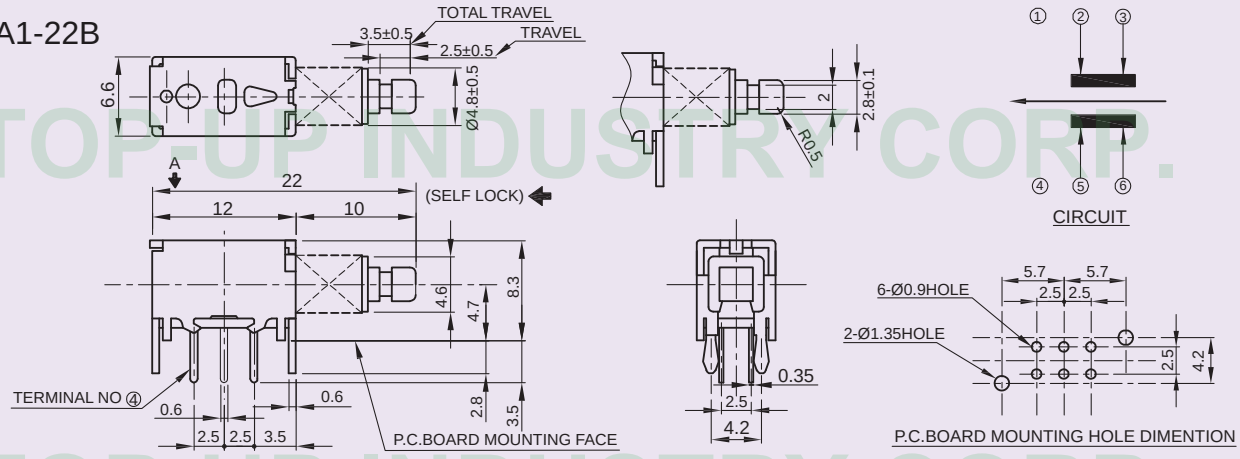

The drawings and specifications are for reference only. For further detail, please contact Top-up head office.

PS1A2-22B

Features

- 2.5mm travel.
- 5.5mm in lever height from P.C.B.
- Printed wiring available.

Applications

- Audio system.
- AP Internet hardware.

Outline Drawing

PS1A2-22B-13ZL

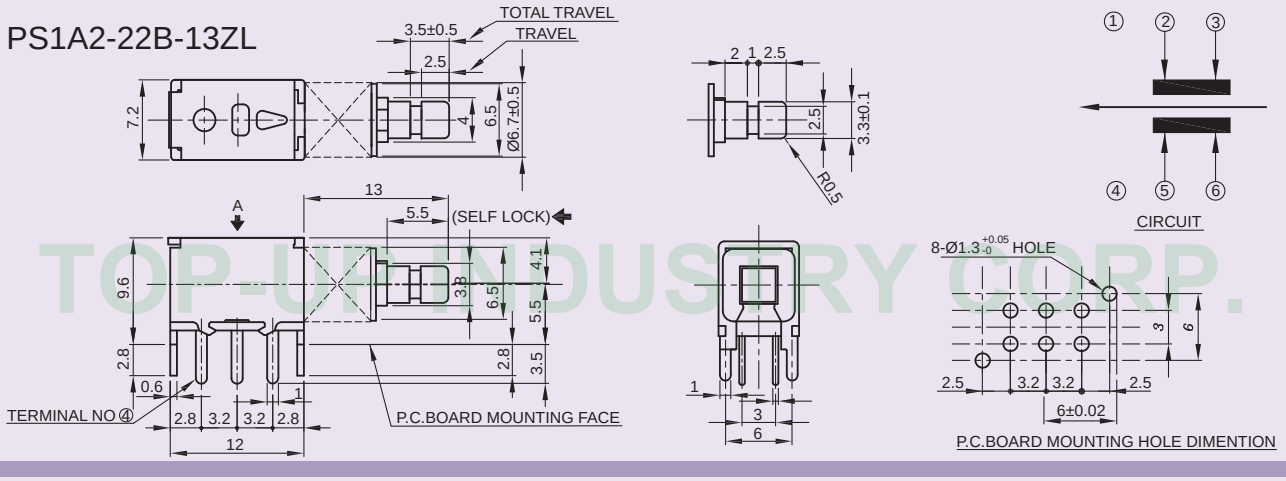

PS1A2-22B-13ZN

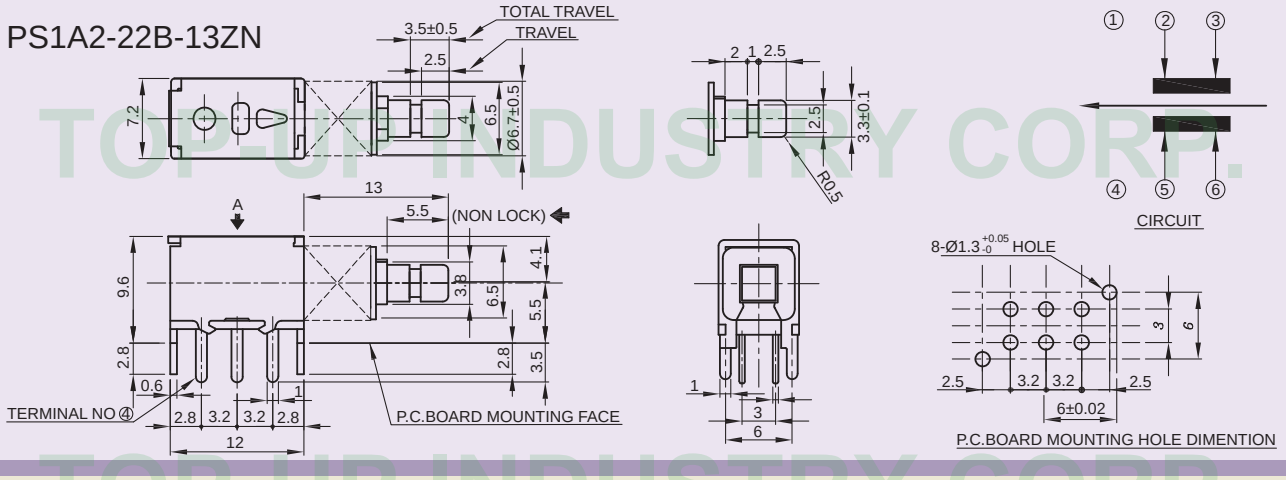

TOP-UP INDUSTRY CORP.

The drawings and specifications are for reference only. For further detail, please contact Top-up head office.

Push Switch PS1B / PS1BM Series Code Explanation

PS1B - □ □ - □ □ □ - □ - Series NO.

Series Symbol

Code	Description
PS1B	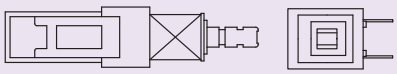
PS1BM	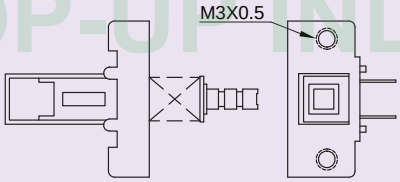

Pole - Position

Code	Description
22	2 P 2 T

Terminal

Code	Description
	P.C.B TYPE
B	
BS	

Lock

Code	Description
L	Self - Lock
N	Non - Lock

Travel

Code	Description	
	Travel	Total Travel
Z	2.5	3.5
	–	3.5

Stem Length

Timing

Code	Description
S	Shorting
N	Non - Shorting

TOP-UP INDUSTRY CORP.

The drawings and specifications are for reference only. For further detail, please contact Top-up head office.

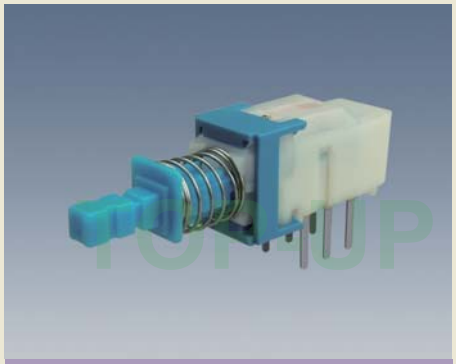

PS1B-22B

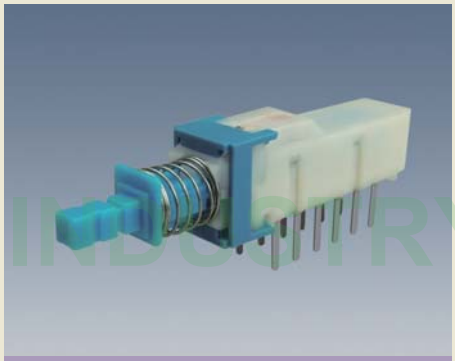

PS1B-42B

PS1BM-22B

Features

- 2.5mm travel.
- Printed wiring available.

Applications

- Audio system, TV, Mixer.

Outline Drawing

PS1B-22B

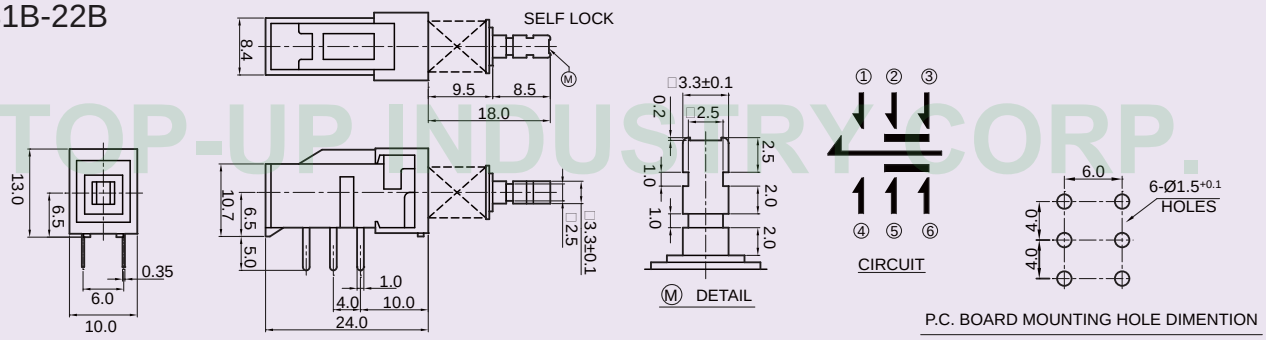

PS1B-42B

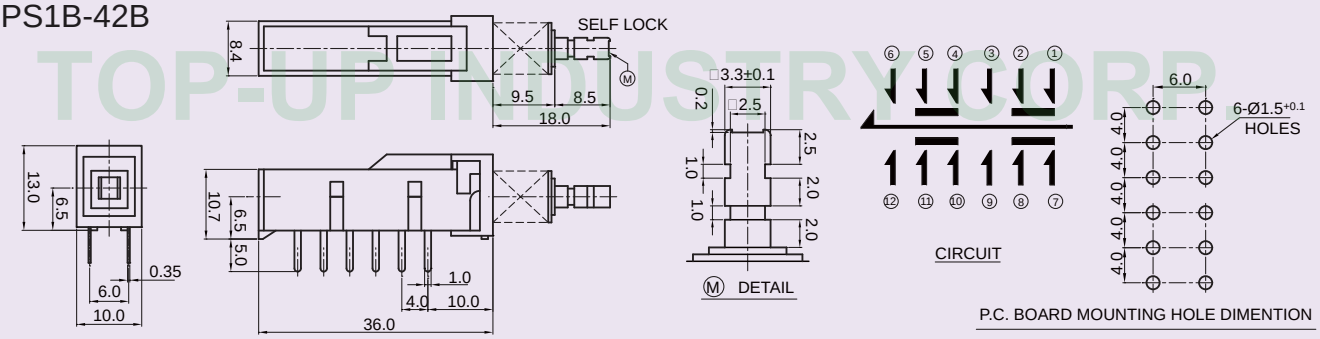

PS1BM-22B

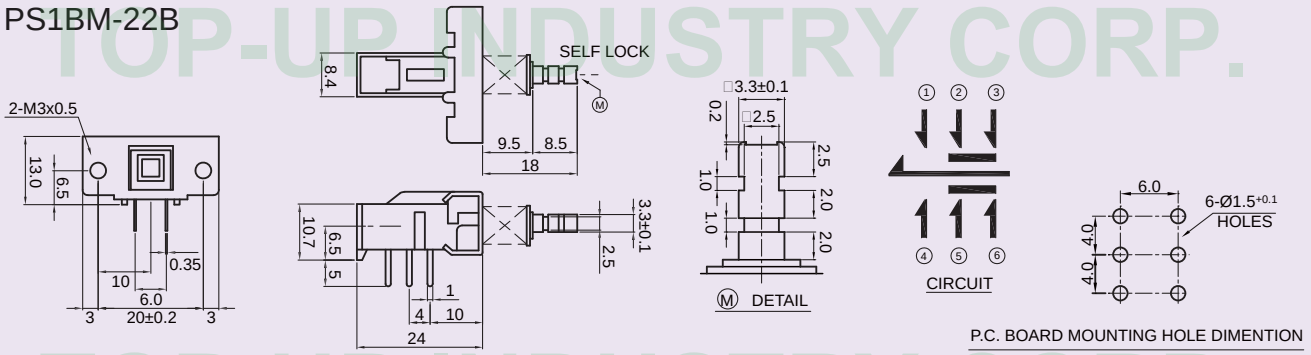

TOP-UP INDUSTRY CORP.

The drawings and specifications are for reference only. For further detail, please contact Top-up head office.

PS1D - □□ - □□□ - □ - Series NO.

Series Symbol

Code	Description
PS1D	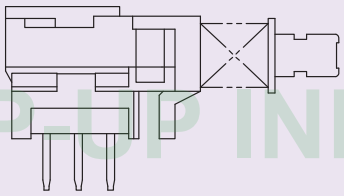

Pole - Position

Code	Description
22	2 P 2 T

Terminal

Code	Description
	P.C.B TYPE
B	

Lock

Code	Description
L	Self - Lock
N	Non - Lock

Travel

Code	Description	
	Travel	Total Travel
D	1.5	2.5

Stem Length

Timing

Code	Description
S	Shorting
N	Non - Shorting

TOP-UP INDUSTRY CORP.

The drawings and specifications are for reference only. For further detail, please contact Top-up head office.

PS1D-22B

Features

- 1.5mm travel.
- Compact size only 6.5mm in height of lever from P.C.B.

Applications

- Various switching purposes in all kinds of home and industrial equipment.
- For Audio mixer equipment.

Outline Drawing

PS1D-22B

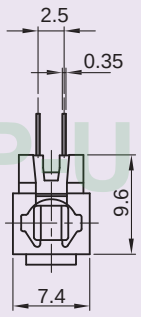

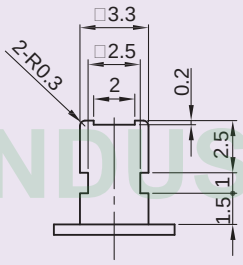

M DETAIL

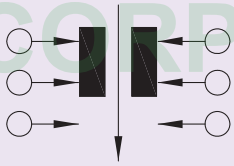

CIRCUIT DIAGRAM

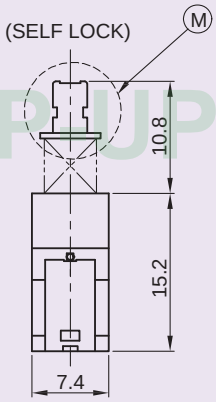

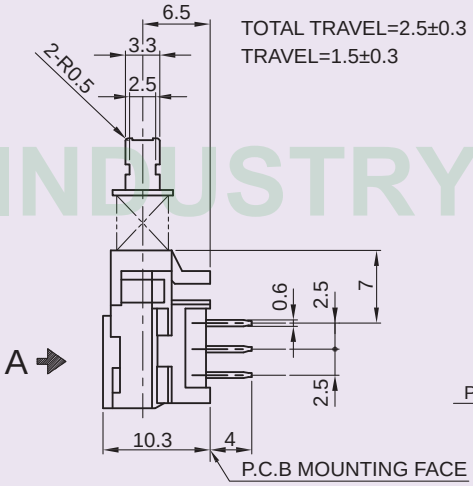

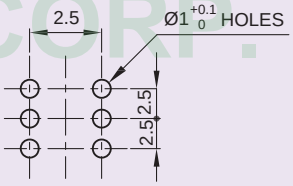

P.C.BOARD MOUNTING HOLE DIMENTION

TOP-UP INDUSTRY CORP.

The drawings and specifications are for reference only. For further detail, please contact Top-up head office.

PPSA - □ □ - □ □ □ □ - □ - Series NO.

Series Symbol

Code	Description
PPSA	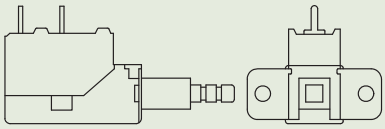
PPSA1	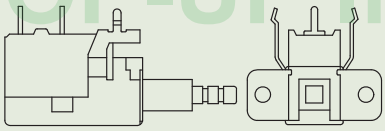
PPSA2	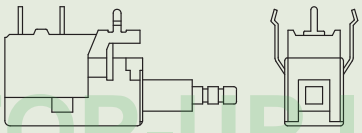

Pole - Terminal

Code	Description
12	1 Pole 2 Terminal

Terminal

Code	Description
A	SOLDER 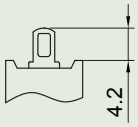
B	P.C.B TYPE 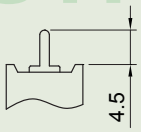
B1	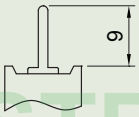

Travel

Code	Description	
	Travel	Total Travel
D	1.5	2.5
Z	2.5	3.5

Stem Color

Code	Description
Y	Yellow
GR	Green

Screw

Code	Description
M	With Screw 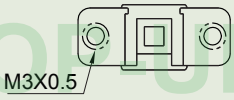
N	Without Screw 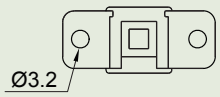

Stem Length

Operating Force

Code	Operating Force
35	350gf
40	400gf
60	600gf

TOP-UP INDUSTRY CORP.

The drawings and specifications are for reference only. For further detail, please contact Top-up head office.

PPSA

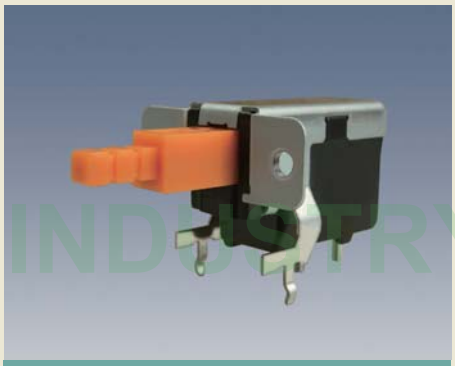

PPSA1

PPSA2

Features

- Compact power switch conforming to safety standards for electronic equipment.
- Two types of travel : 1.5mm and 2.5mm.
- Micro-gap contact structure.
- Provided with simultaneous indication of safety standard marks used in various countries.
- SPST circuit configuration only.

Applications

- Audio equipment.

Outline Drawing

PPSA

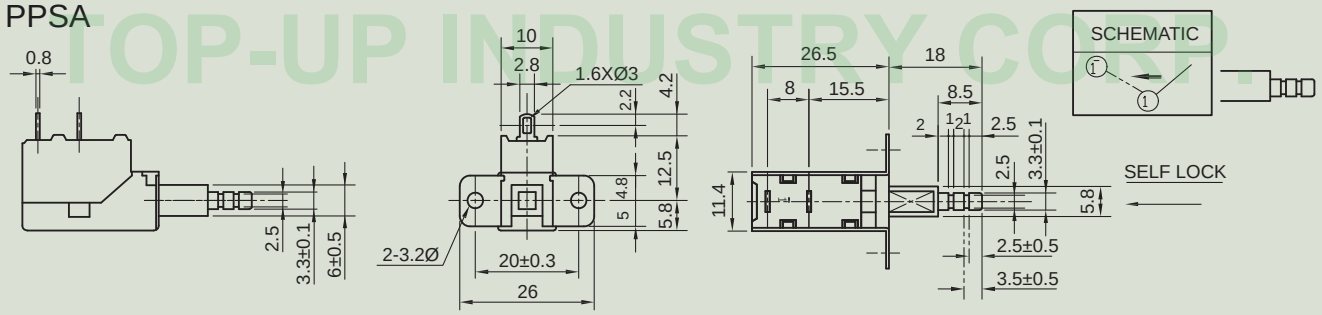

PPSA1

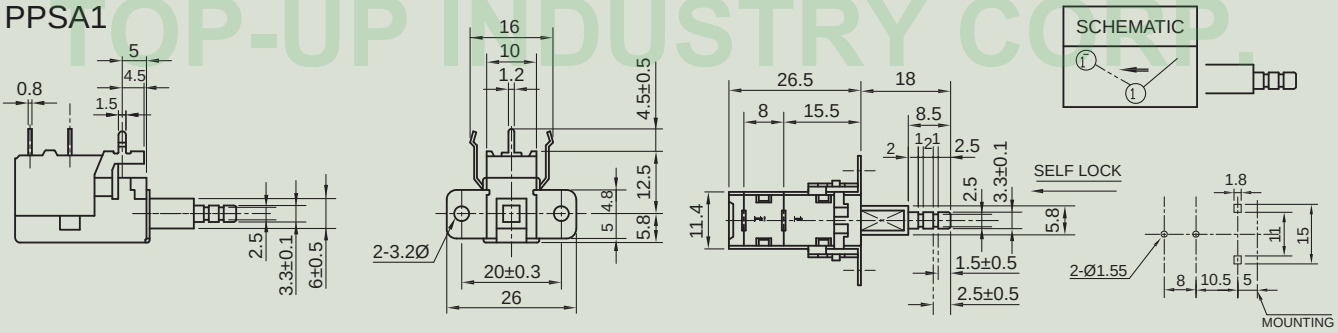

PPSA2

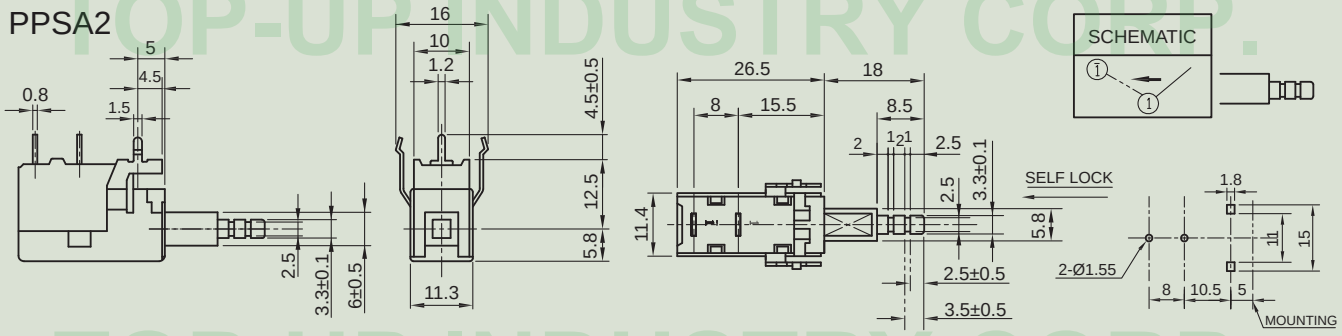

TOP-UP INDUSTRY CORP.

The drawings and specifications are for reference only. For further detail, please contact Top-up head office.

5 Direction Switch TSQV Series Code Explanation

TSQV □ □ - □ - □ □ □ - Series NO. - □

Series Symbol

Code	Description	Life Cycle	Operating Force
TSQV	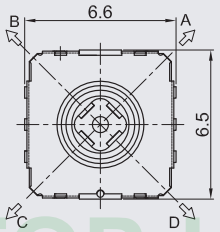	$10X10^4$ Cycles	Center 240gf 4-Way 120gf

Stem

Code	Description
A	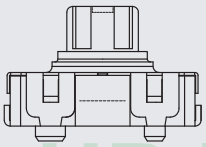

Guide Bosses

Code	Description
A	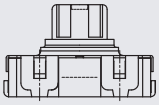 Without Guide Bosses
B	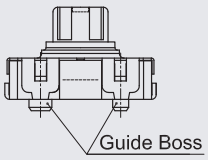 With Guide Bosses

Stem Color

Code	Description
B	● Black

Operating Force

Code	Operating Force
1	Center 240±70gf 4-Way 120±70gf

Stem Height (H)

Code	Stem Height	Description
4.5	4.5 mm	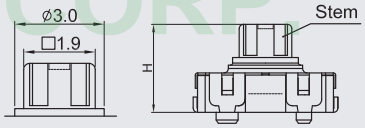
5	5 mm	

Terminal

Code	SMT Type
TL	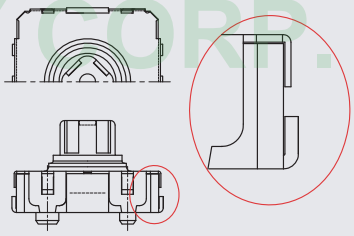

Packing

Code	Description
□ Blank	
R	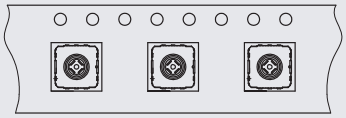

TOP-UP INDUSTRY CORP.

The drawings and specifications are for reference only. For further detail, please contact Top-up head office.

TSQVA□-TL

Features

- Compact sized low-profile with 6.6mmx6.5mm outline dimensions and 4.5mm to 5.0mm height.
- Multi-directional input type with four directions and center push.
- Reflow solderable.
- Packaged with a 16mm embossed taping.
- Center: 0.15mm Travel 4-Way: 0.25mm Travel

Applications

- Digital cameras and digital video cameras.
- Portable audio devices.
- Cellular phones and personal digital assistants.
- Operation of various digital devices.

Outline Drawing

TSQVA□-TL

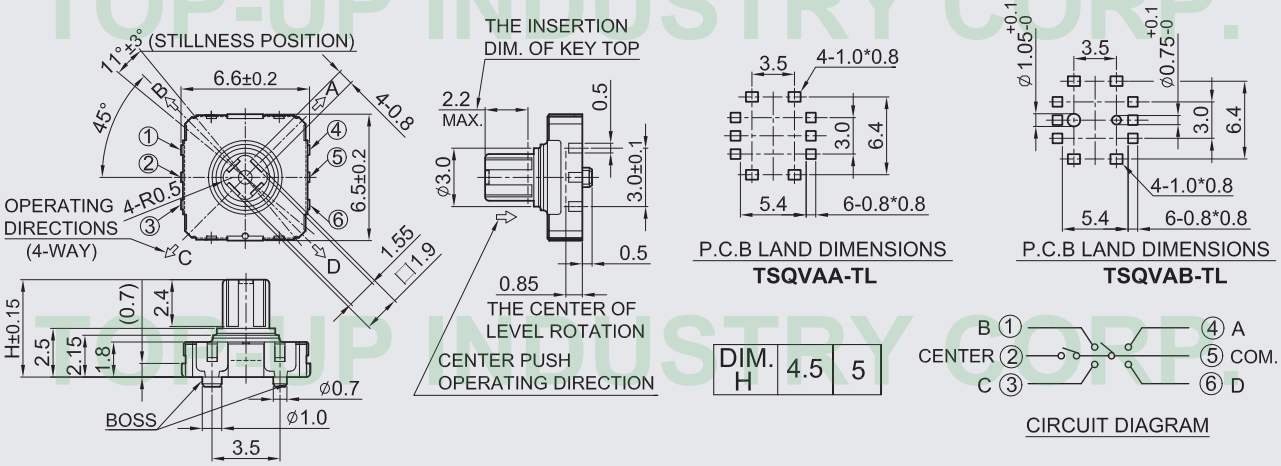

DIM. H	4.5	5

TOP-UP INDUSTRY CORP.

The drawings and specifications are for reference only. For further detail, please contact Top-up head office.

Double Action Tact Switch TSQA Series Code Explanation

TSQA □ - □ - □ □ □ - Series NO. - □

Series Symbol

Code	Description	Life Cycle	Operating Force
TSQA	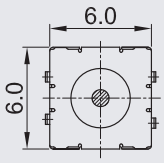	$3X10^4$ Cycles	1st 100gf 2nd 260gf

Height (H)

Code	Description
0.9	0.9 mm 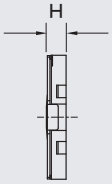

Operating Force

Code	Operating Force	Return Force
1	1st 100±50gf 2nd 260±70gf	1st 10 MIN. 2nd 50 MIN.

Without Stem

Code	Description
B	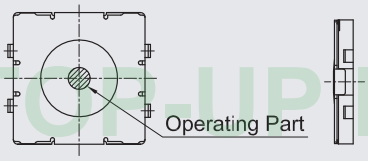

Terminal

Code	SMT Type
TL	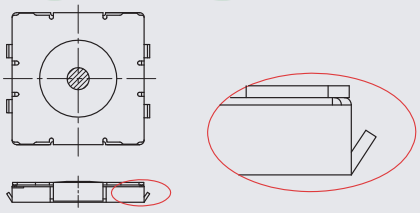

Stem Color

Code	Description
W	White

Packing

Code	Description
□ Blank	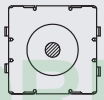
R	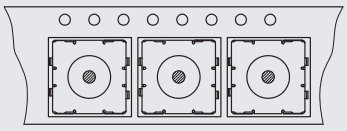

TOP-UP INDUSTRY CORP.

The drawings and specifications are for reference only. For further detail, please contact Top-up head office.

TSQAB-TL-0.9

Features

- Surface mounting type enabling downsizing with 6mmx6mm outer dimensions and a 0.9mm height.
- A single-pole-double-throw type offers a double action,turning on the first contact with the first push and the second step by pushing again.
- Light application force of 260gf for the second step contributes to reducing blur when used as a camera shutter.
- Reflow solderable.
- Packaged with a 12 mm wide embossed taping.
- 1 st: 0.4mm Travel
- All: 0.6mm Travel

Applications

- Cameras, digital cameras.
- Digital video cameras.
- Compact portable devices.
- Other various operations of electrical devices with multi-function.

Outline Drawing

TSQAB-TL-0.9

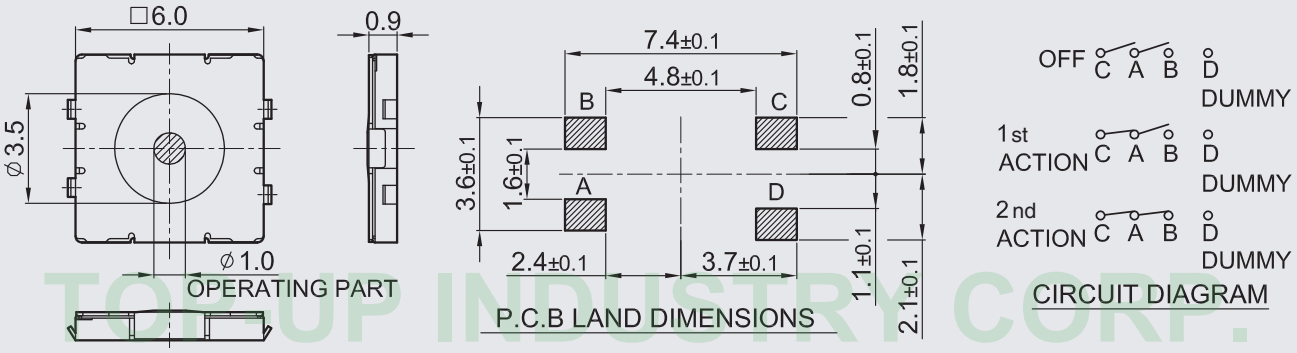

TOP-UP INDUSTRY CORP.

The drawings and specifications are for reference only. For further detail, please contact Top-up head office.

LED Tact Switch TSHC/TSHD Series Code Explanation

TSHC [ ] - [ ] - [ ] [ ] [ ] - [ ] [ ] - **Series NO.**

Series Symbol

Code	Description
TSHC	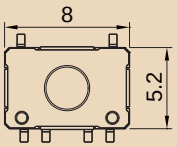
TSHD	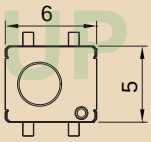

Guide Bosses

Code	Description
Blank	Without Guide Bosses
B	With Guide Bosses 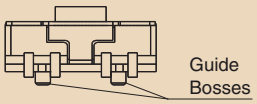

Terminal Type

Code	Description
T	
B	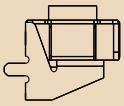

Stem Color

Code	Description
T	Transparent

Height(H)

Code	Height
2.8	2.8mm
3.05	3.05mm

Operating Force

Code	Oparating Force
2	160 ± 50gf

LED Color

Code	Description
BL	Blue
YGR	Yellowgreen
R	Red
Y	Yellow
W	White

TOP-UP INDUSTRY CORP.

The drawings and specifications are for reference only. For further detail, please contact Top-up head office.

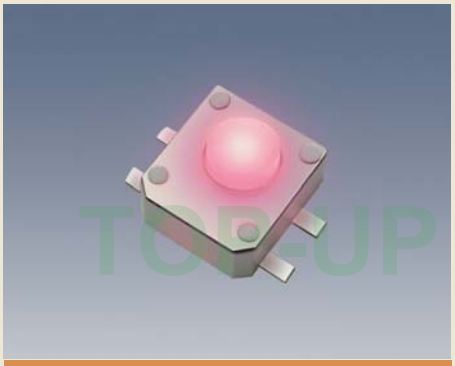

TSHD-T

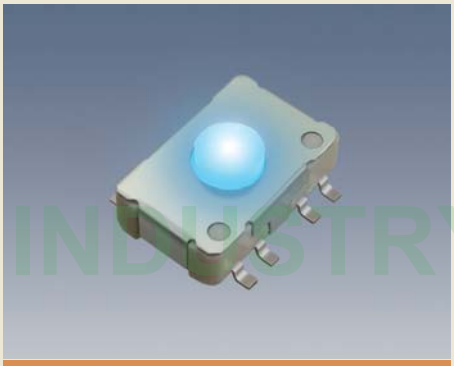

TSHC-T

TSHCB-B

Features

- The world's most thin tact switch with LED products (H = 2.8mm)
- With different-color, high-brightness LED , showing different lighting effects.Reflow solderable.
- Can be directly applied to the case of consumer electronic switches.
- Reflow solderable

Applications

- Notebook, audio and video products, LCD
- monitors, instruments, GPS .. etc.
- For various operation in digitalized devices

Outline Drawing

TSHD-T

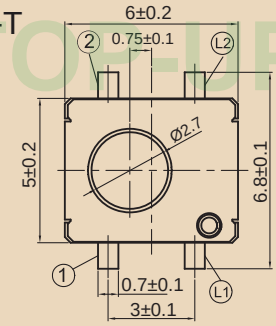

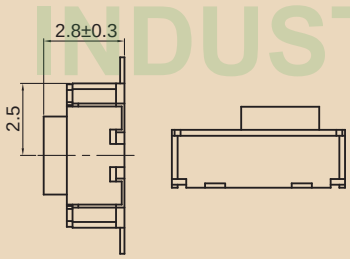

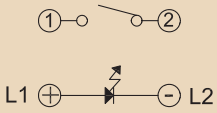

CIRCUIT DIAGRAM

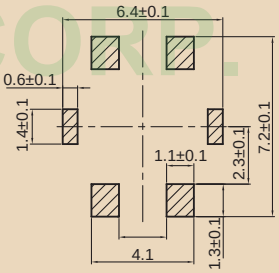

P.C.B MOUNTING HOLE DIMENSIONS

TSHC-T

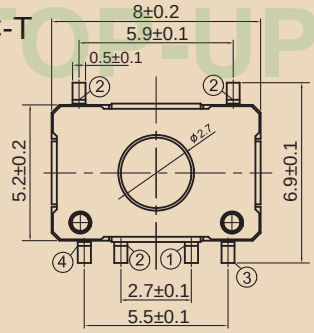

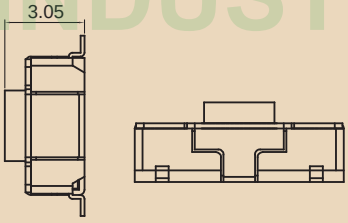

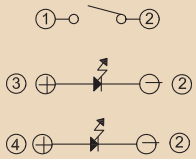

CIRCUIT DIAGRAM

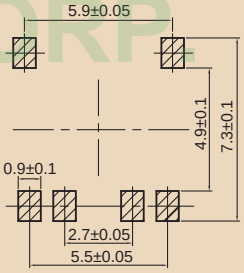

P.C.B MOUNTING HOLE DIMENSIONS

TSHCB-B

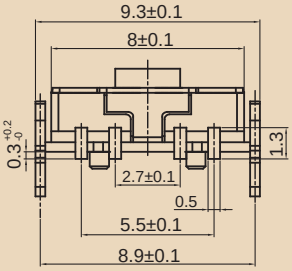

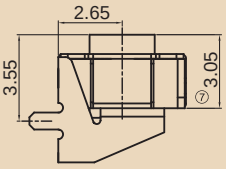

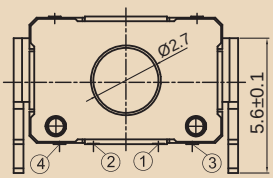

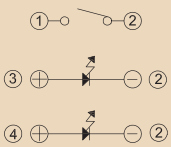

CIRCUIT DIAGRAM

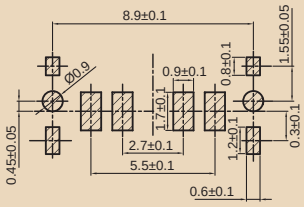

P.C.B MOUNTING HOLE DIMENSIONS

TOP-UP INDUSTRY CORP.

The drawings and specifications are for reference only. For further detail, please contact Top-up head office.

LED Tact Switch TSL6 Series Code Explanation

TSL6 □□-□-□□□□□-□□-Series NO.

Series Symbol

Code	Description
TSL6	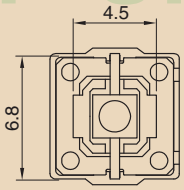
TSL6A	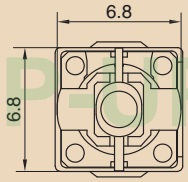

Cap Type

Code	Description
R	Round R(R1,R2…) (See Drawing 1)
S	Square

Horizontal / Vertical

Code	Description
V	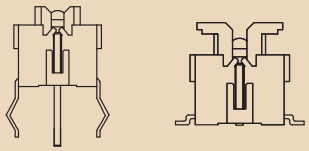
H	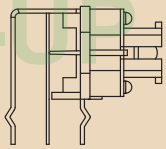
HC	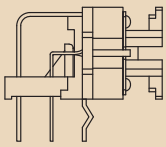

Terminal

Code	Deiscription
BS	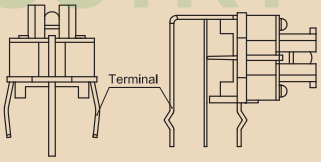
T	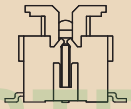

Housing Color

Code	Deiscription
B	Black
G	Gray

Height (H)

Code		Description
5.8	5.8 mm	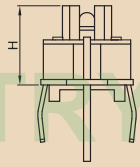
7	7 mm	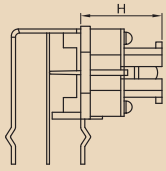

LED

Code	Description
A	
B	

LED Color

Code	Description
BL	Blue
GR	Green
R	Red
W	White
Y	Yellow

Operating Force

Code	Operating Force
2	160±50gf
3	260±70gf
10	180±50gf

Cap / Stem Color

Code	Description
B	Black
G	Gray
W	White
R	Red
GR	Green
Y	Yellow
T	Transparent

TOP-UP INDUSTRY CORP.

The drawings and specifications are for reference only. For further detail, please contact Top-up head office.

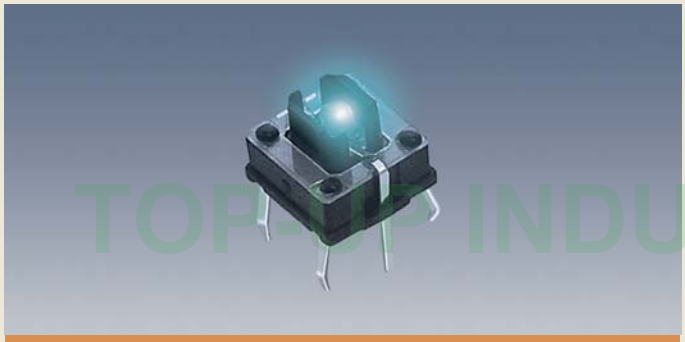

TSL6V-BS

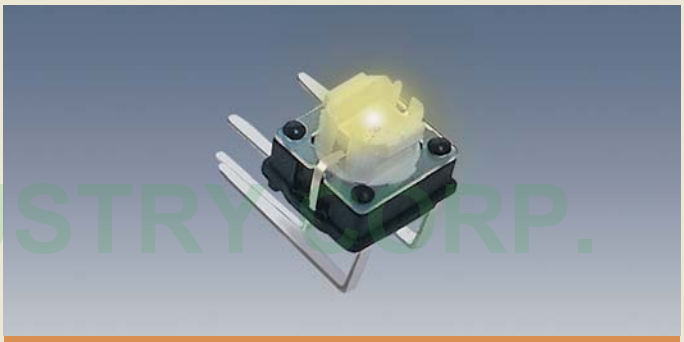

TSL6H-BS

Features

- Small size.
- LED illumination.
- Two color available.
- Long life.
- Right Angle terminal.

Applications

- Consumer Products.
- Instrumentations.
- Computer Products.
- Communication Equipments.

Outline Drawing

TSL6V-BS

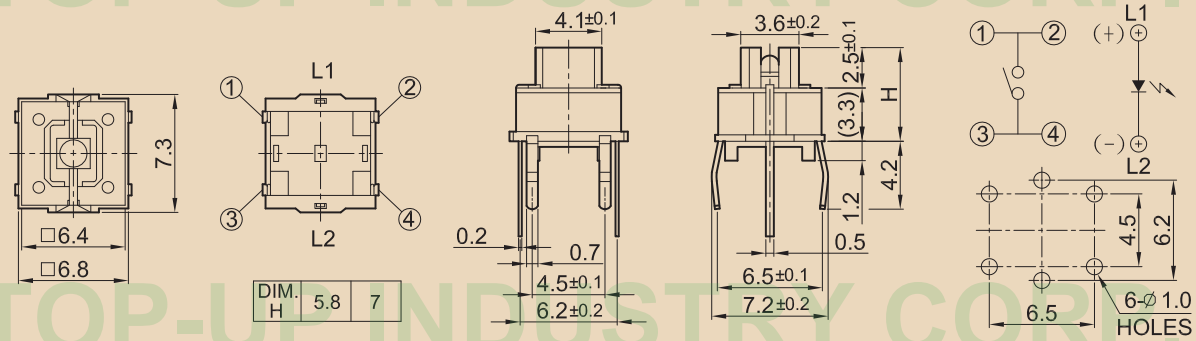

TSL6H-BS

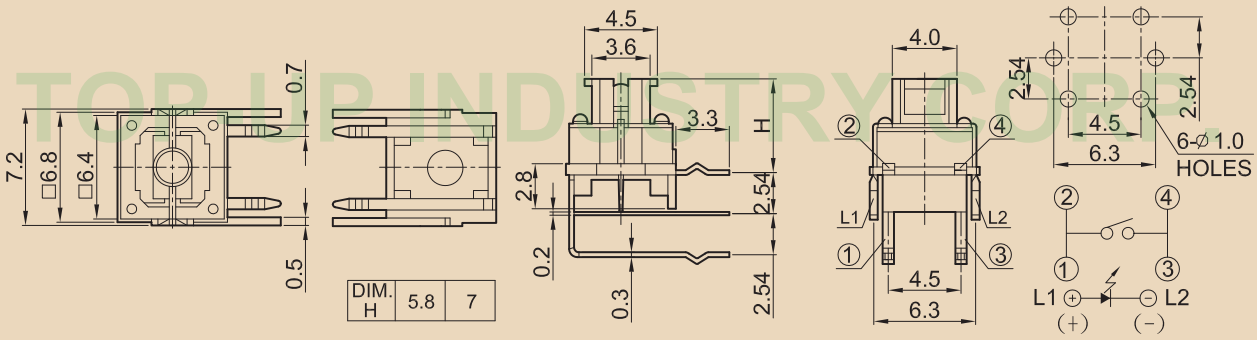

TOP-UP INDUSTRY CORP.

The drawings and specifications are for reference only. For further detail, please contact Top-up head office.

TSL6AH-BS

TSL6AHC-BS

TSL6RH-BS

Outline Drawing

TSL6AH-BS

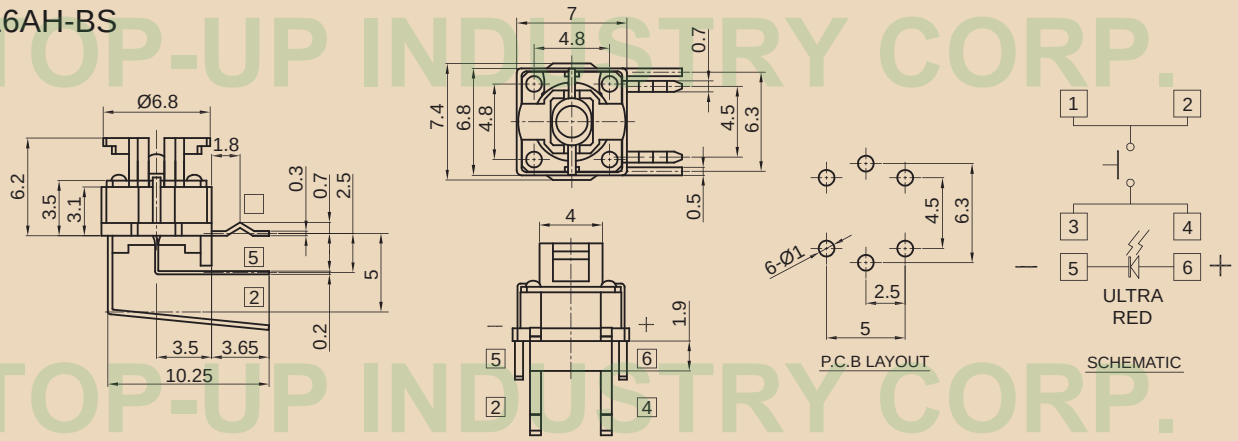

TSL6AHC-BS

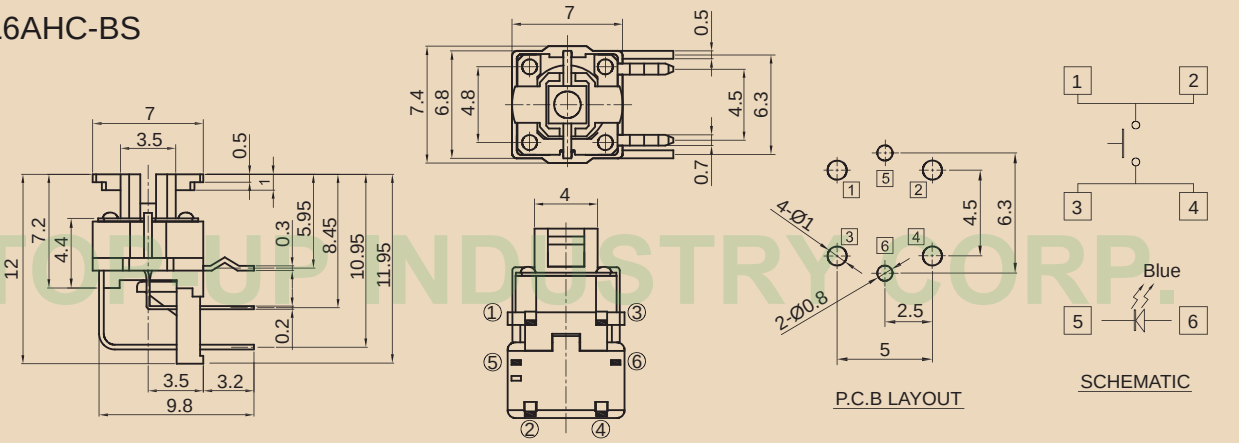

TSL6RH-BS

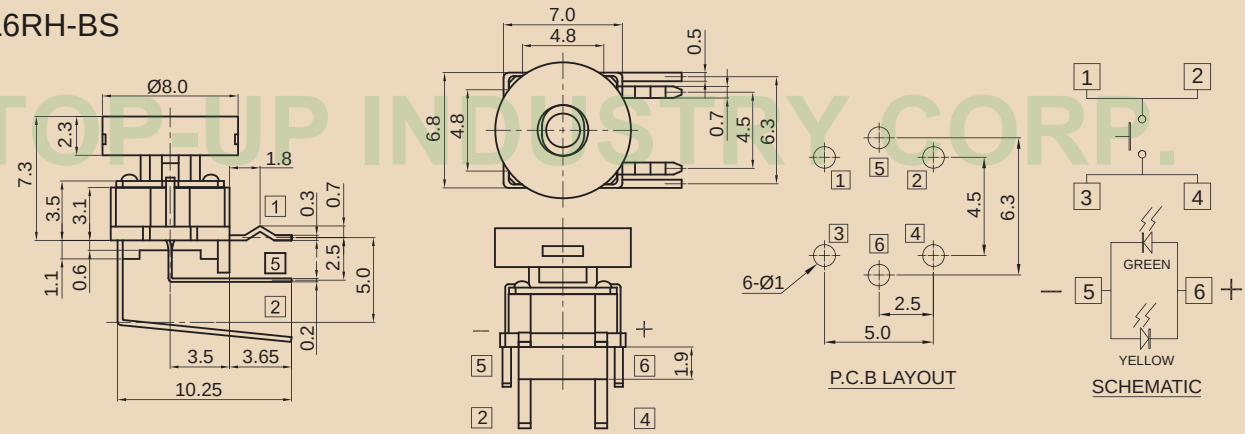

TOP-UP INDUSTRY CORP.

The drawings and specifications are for reference only. For further detail, please contact Top-up head office.

Drawing 1

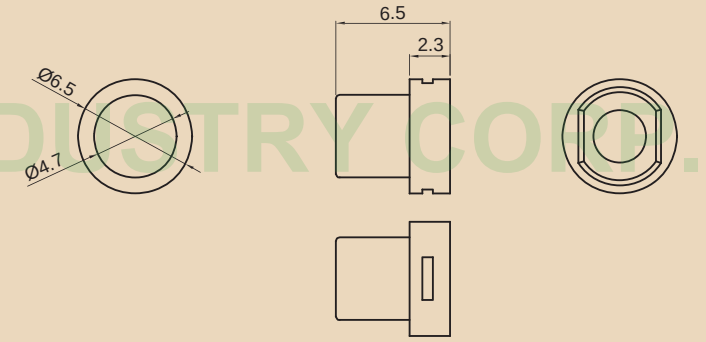

R1

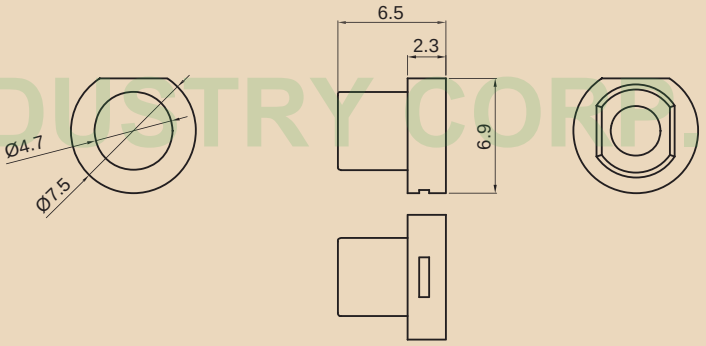

R2

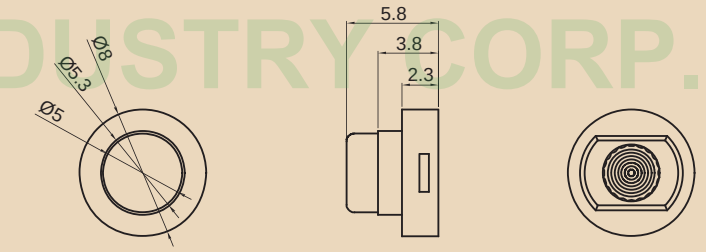

R3

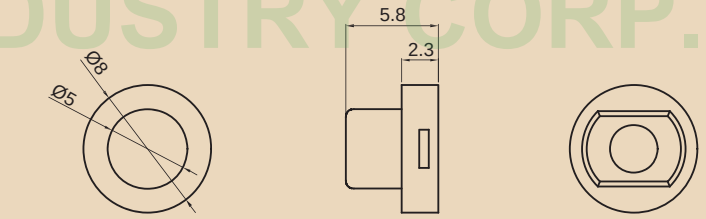

R4

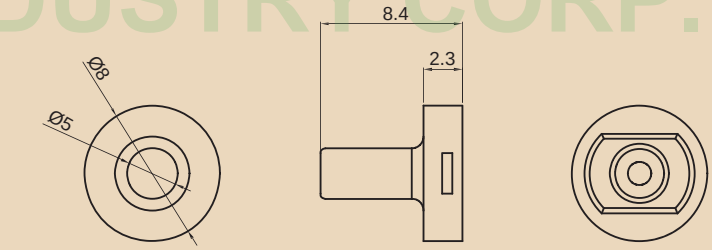

R5

TOP-UP INDUSTRY CORP.

The drawings and specifications are for reference only. For further detail, please contact Top-up head office.

TOP-UP LED Tact Switch TSB / TSBL Series Code Explanation

TSBL10 □□ - □ - □□ □□ - □ - □ - Series NO.

Series Symbol

Code	Description
TSBL6	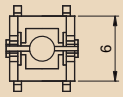
TSBL6 (With Cap)	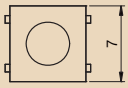
TSBL6A	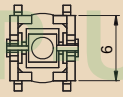
TSB10	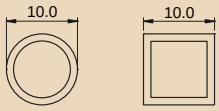
TSBL10	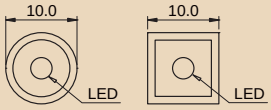

Housing Color

Code	Description
B	Black
G	Gray

Height

Code	Height
8.1	8.1mm
8.2	8.2mm

LED Color

Code	Description
BL	Blue
GR	Green
R	Red
Y	Yellow
W	White
RGB	FULL COLOR
BLANK	WITHOUT

Cap

Code	Description
R	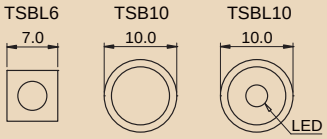
S	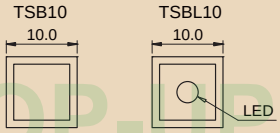

Terminal

Code	Description
BS	P.C.B Type 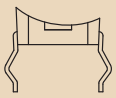
T	SMT Type

Cap/Stem Color

Code	Description
B	Black
G	Gray
GR	Green
W	White
O	Orange
R	Red
Y	Yellow
T	Transparent

LED

Code	Description
A	
B	

Vertical

Code	P.C.B Type	SMT Type
V	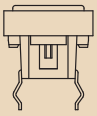	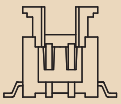

Operating Force

Code	Operating Force
2	160±50gf
10	180±50gf

The drawings and specifications are for reference only. For further detail, please contact Top-up head office.

TOP-UP INDUSTRY CORP.

TSBL6V-T

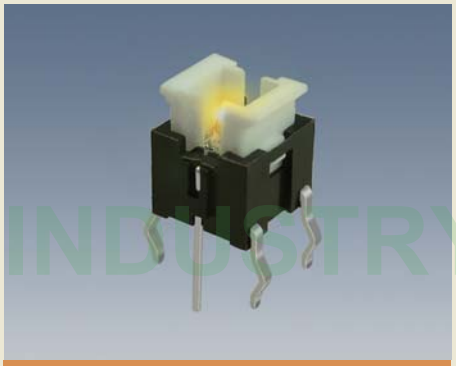

TSBL6V-BS

TSBL6AV-BS

Outline Drawing

TSBL6V-T

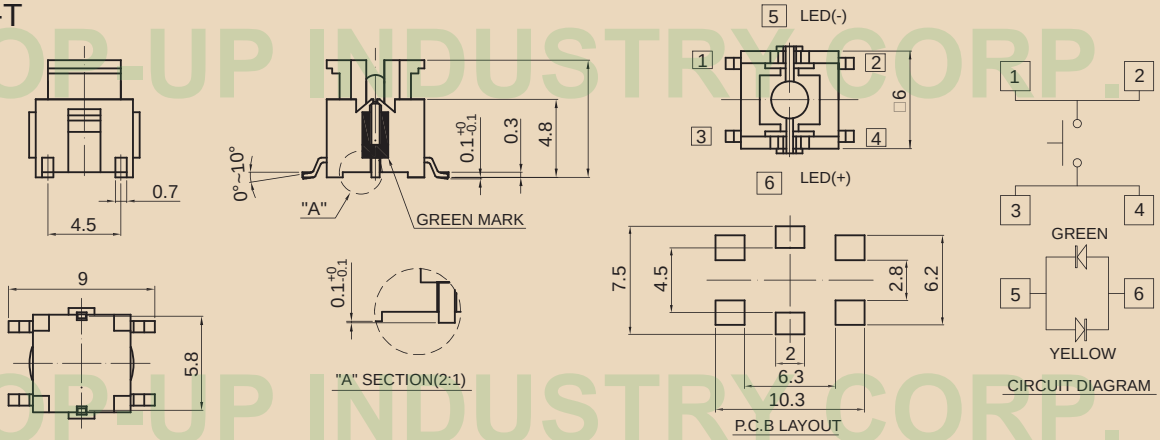

TSBL6V-BS

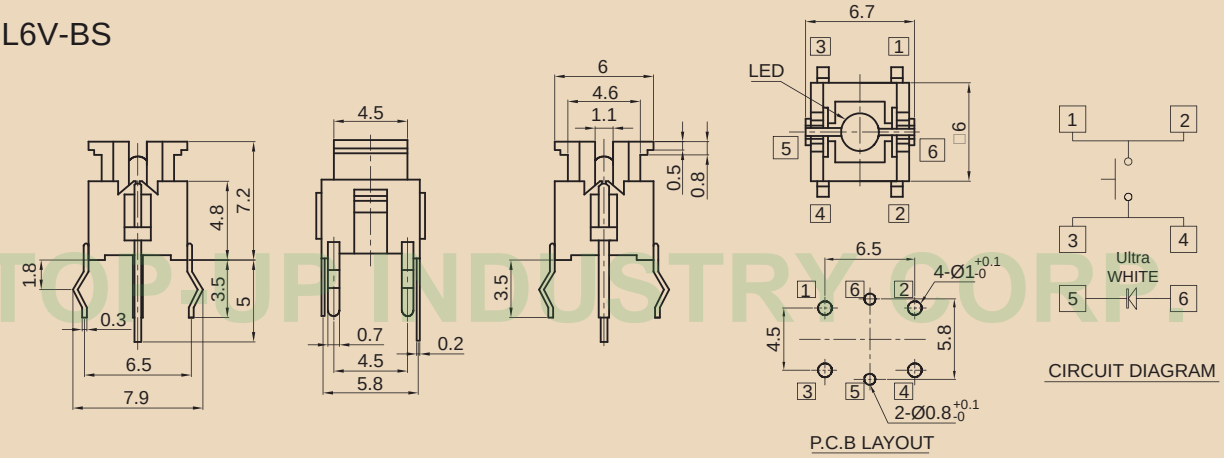

TSBL6AV-BS

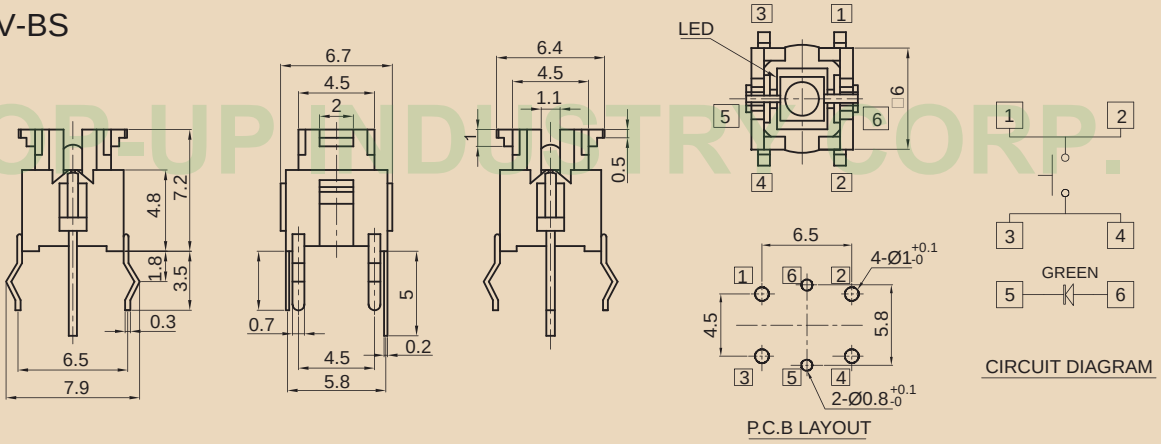

TOP-UP INDUSTRY CORP.

The drawings and specifications are for reference only. For further detail, please contact Top-up head office.

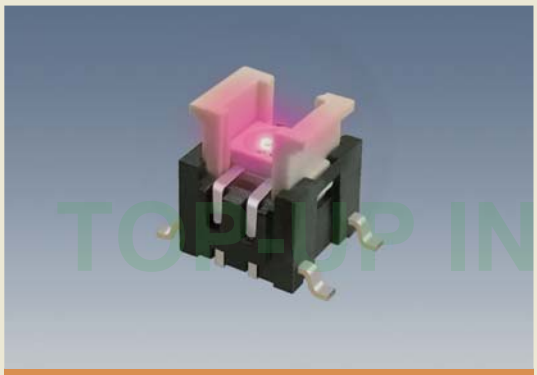

TSBL6V-T(RGB)

Features

- Small size.
- LED illumination.
- Two color available.
- Long life.

TSBL6RV-BS

Applications

- Consumer Products.
- Instrumentations.
- Computer Products.
- Communication Equipments.

TOP-UP INDUSTRY CORP.

Outline Drawing

TSBL6V-T(RGB)

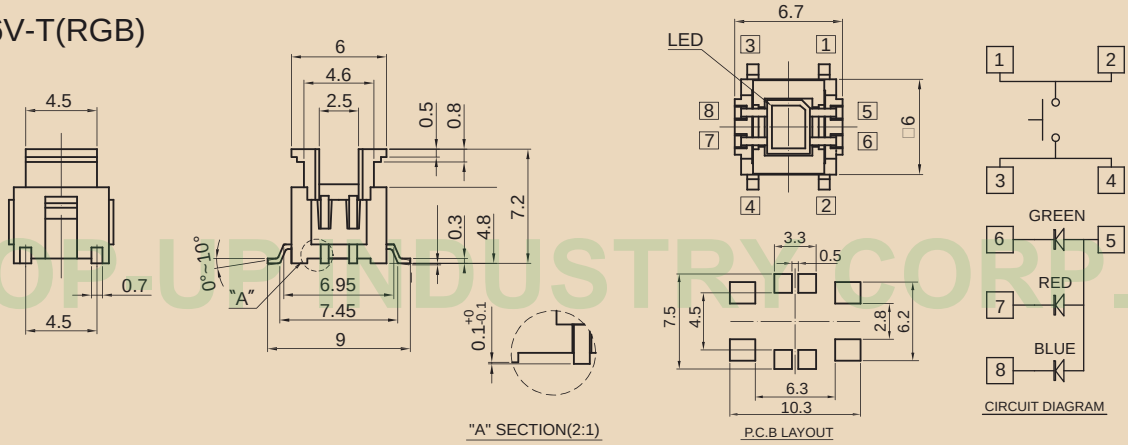

TSBL6RV-BS

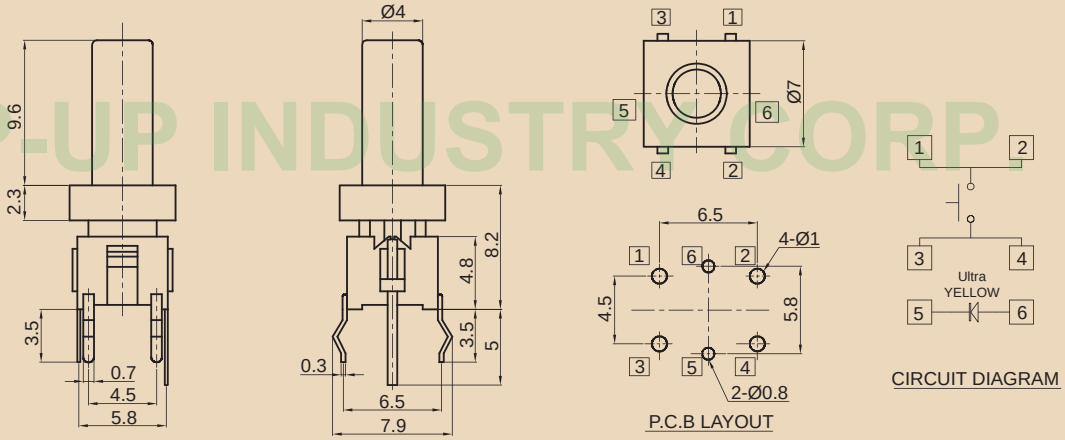

The drawings and specifications are for reference only. For further detail, please contact Top-up head office.

TSB10RV-BS

TSBL10RV-BS

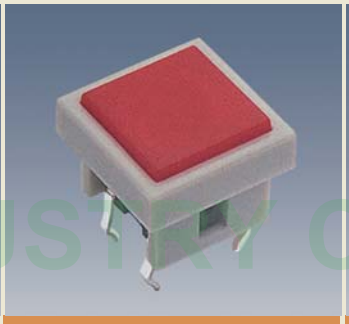

TSB10SV-BS

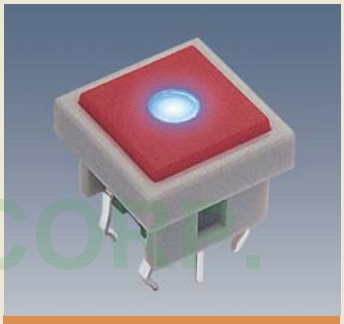

TSBL10SV-BS

Outline Drawing

TSB10RV-BS

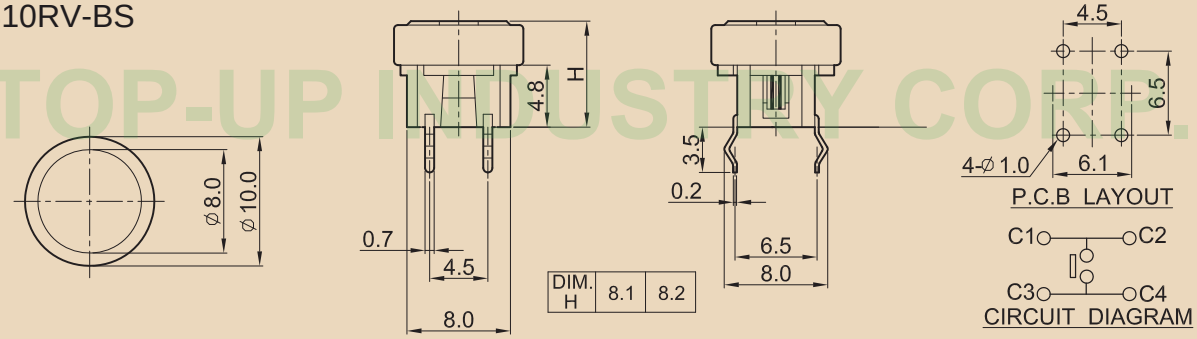

TSBL10RV-BS

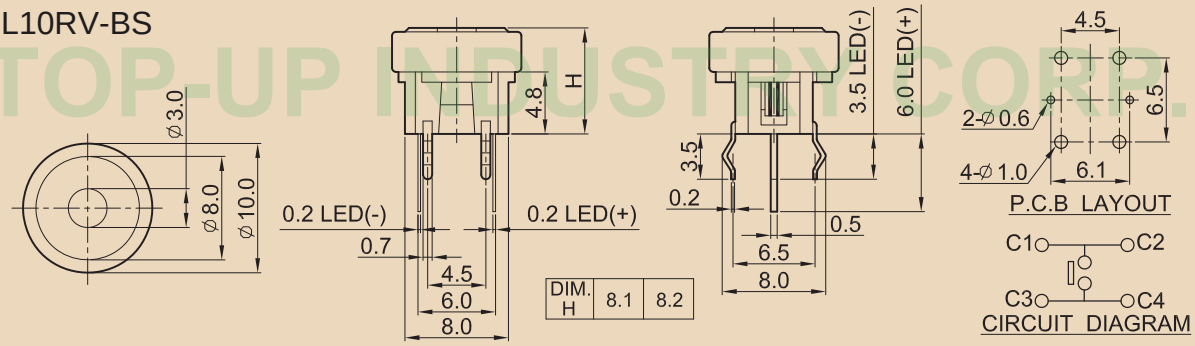

TSB10SV-BS

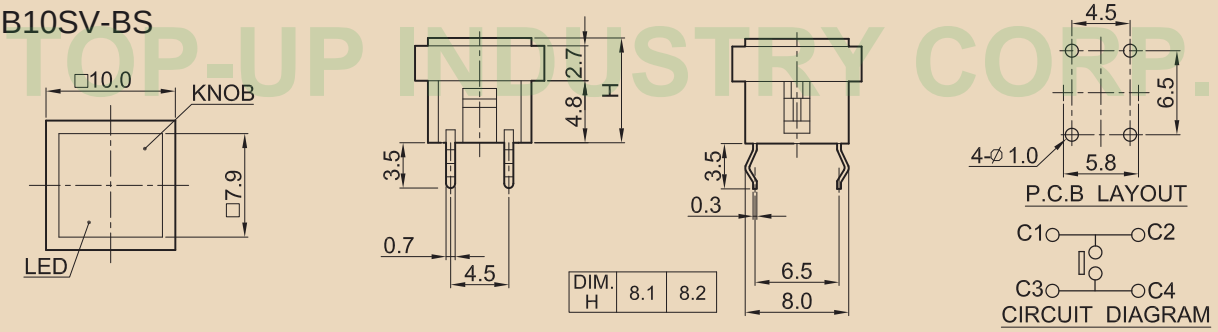

TSBL10SV-BS

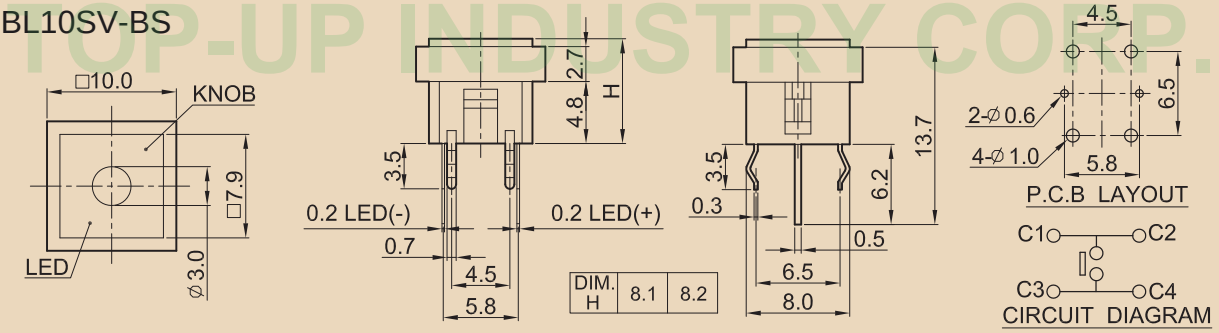

TOP-UP INDUSTRY CORP.

The drawings and specifications are for reference only. For further detail, please contact Top-up head office.

Tact Switch TSHH / TSHV Series Code Explanation

TSHH □□ - □ - □□□ - **Series NO.** - □

Series Symbol

Code	Description	Life Cycle	Operating Force
TSHH		10^5 Cycles	100gf 160gf 260gf
TSHL (Long Life)		10^6 Cycles	100gf
		$5X10^5$ Cycles	160gf
		$2X10^5$ Cycles	260gf
TSHV		$5X10^5$ Cycles	100gf 160gf 260gf
TSVL (Long Life)		10^6 Cycles	100gf
		$5X10^5$ Cycles	160gf
		$2X10^5$ Cycles	260gf

Horizontal / Vertical

Code	Description
H	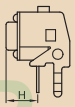
V	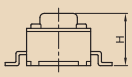 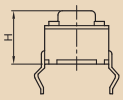

Earth Terminal

Code	Description
□ Blank	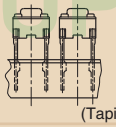 (Taping)
E	Earth Terminal

Stem Height (H)

Code	Stem height	Description
3.85	3.85mm	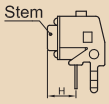
4.3	4.3mm	
5	5mm	
5.85	5.85mm	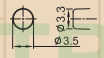 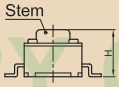
7	7mm	
7	7mm SMType	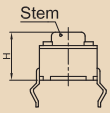
8.35	8.35mm	
9.5	9.5mm	

Operating Force

Code	Operating Force	Return Force
1	100±50gf	10 MIN.
2	160±50gf	50 MIN.
3	260±70gf	50 MIN.
4	130±30gf	50 MIN.

Terminal

Code	P.C.B Type
B	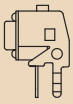
B	
BS	
T	

Stem Color

Code	Description
B	Black
BL	Blue
G	Gray
GR	Green
R	Red
Y	Yellow

Packing

Code	Description
□ Blank	
R	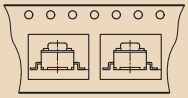

The drawings and specifications are for reference only. For further detail, please contact Top-up head office.

TOP-UP INDUSTRY CORP.

TSHHV-T

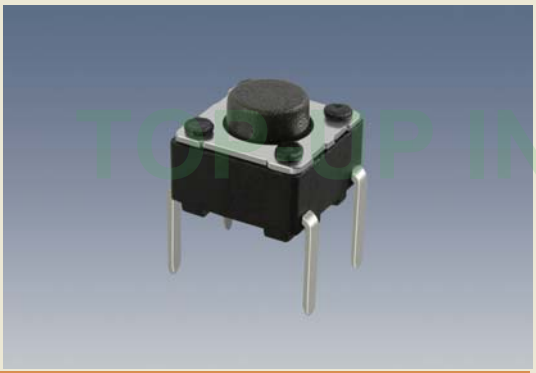

TSHHV-B

Features

- Micro-miniature (6 mmx6 mm outline size),light weight.
- Permits high density mounting on PC board.
- 0.25 mm travel.
- Sharp "click" feel with a positive tactile feedback.
- Insert molding in the contact prevents flux build-up during soldering and permits auto dipping.
- Snap-in type, can be mounted directly on PC board.
- Part of output terminals can be used as jumper lead, thus making circuit arrangement easily.
- Available with grounding terminal, for electro-static discharge.

Applications

- Operating switches in all types of electronic equipment, such as audio equipment, office equipment, communication devices, measuring instruments, TV sets, VCR, etc.

TOP-UP INDUSTRY CORP.

Outline Drawing

TSHHV-T

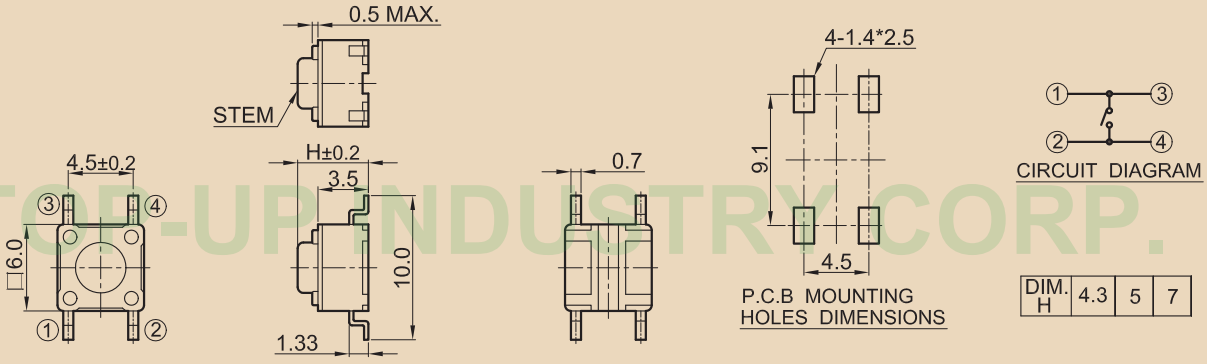

DIM. H	4.3	5	7

TSHHV-B

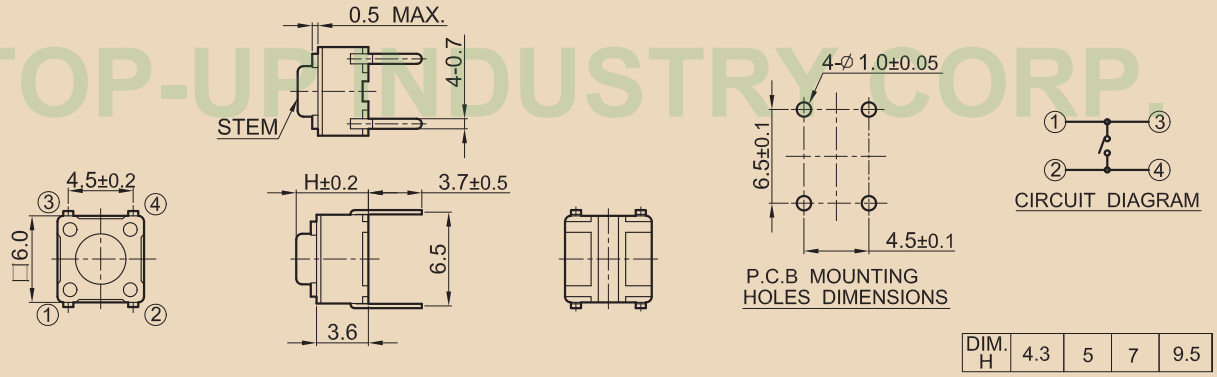

DIM. H	4.3	5	7	9.5

The drawings and specifications are for reference only. For further detail, please contact Top-up head office.

TSHHV-BS

TSHHVE-BS

TSHHH-B

Outline Drawing

TSHHV-BS

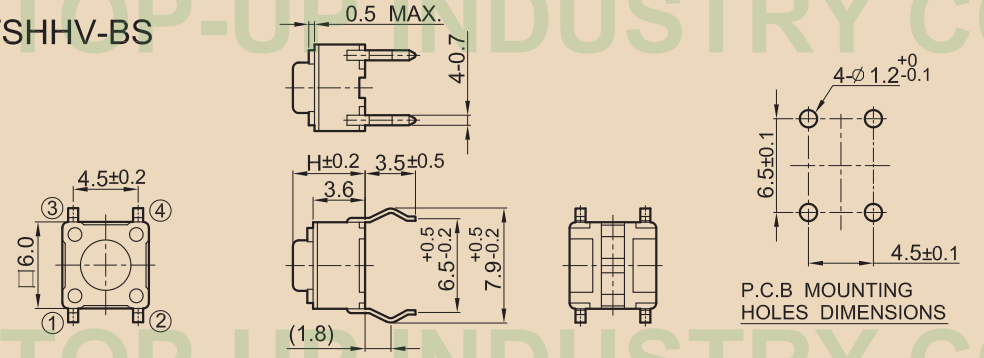

DIM. H	4.3	5	7	9.5

TSHHVE-BS

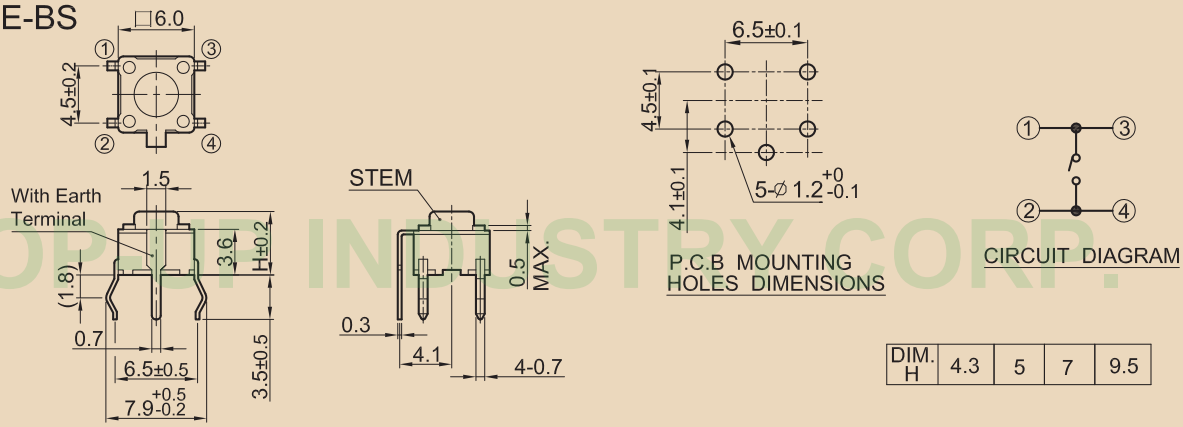

DIM. H	4.3	5	7	9.5

TSHHH-B

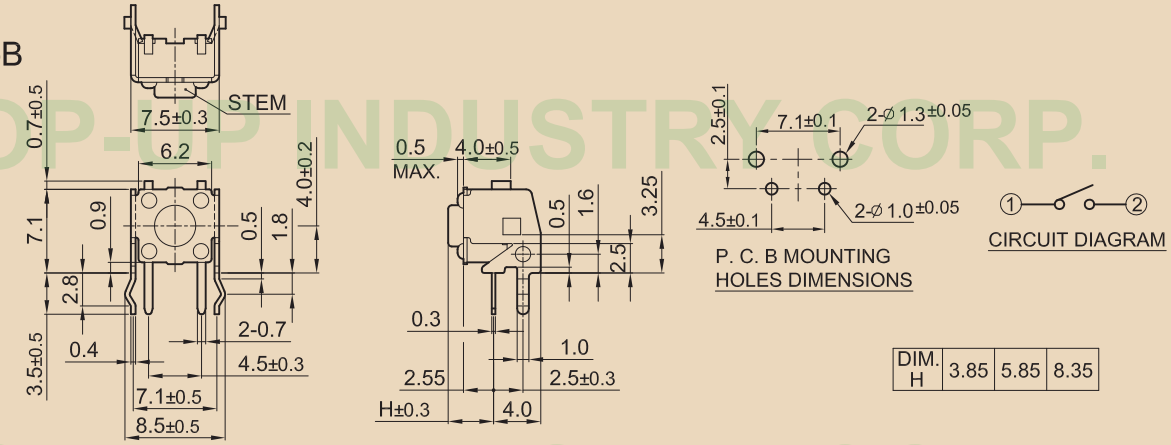

DIM. H	3.85	5.85	8.35

TOP-UP INDUSTRY CORP.

The drawings and specifications are for reference only. For further detail, please contact Top-up head office.

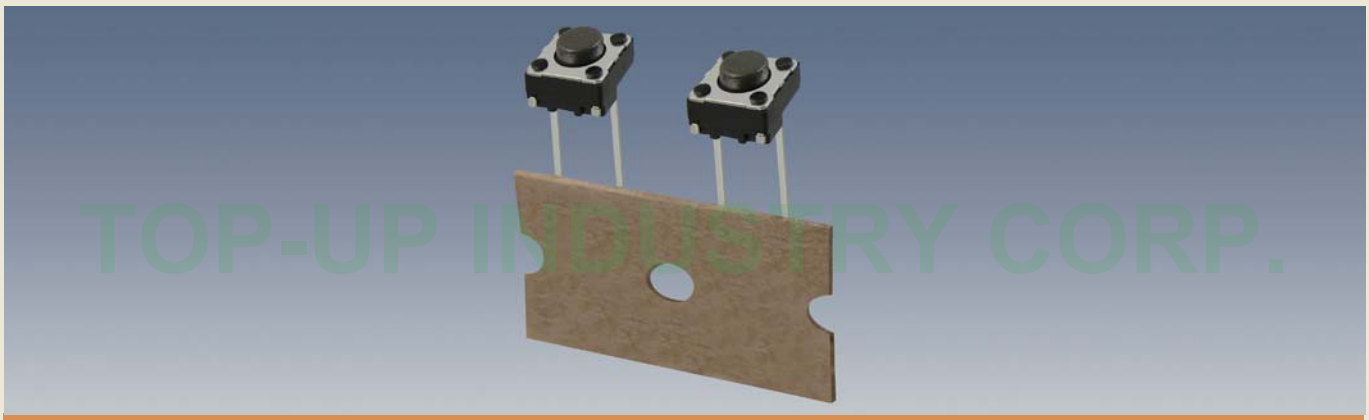

TSHVV-B

Features

- 6X6mm outline size.
- The radial auto inserted machine enables automatic insertion onto printed circuit boards.
- The radial taping system of EIAJ standards is employed for switch supplying.
- Owing to tactile feedback characteristics, the key touch provides a sharp click feel.
- 0.25 mm travel.
- By employing the insert system in molding the contacts, flux rise in soldering is eliminated and automatic dipping is enabled.
- The automatic inserted ability is improved by providing two output terminals.

Applications

- Widely applicable to all types of audio products, office equipment, communications equipment, measuring instruments, TV, VCR and other electronic apparatus as various types of operating switches.

Outline Drawing

TSHVV-B

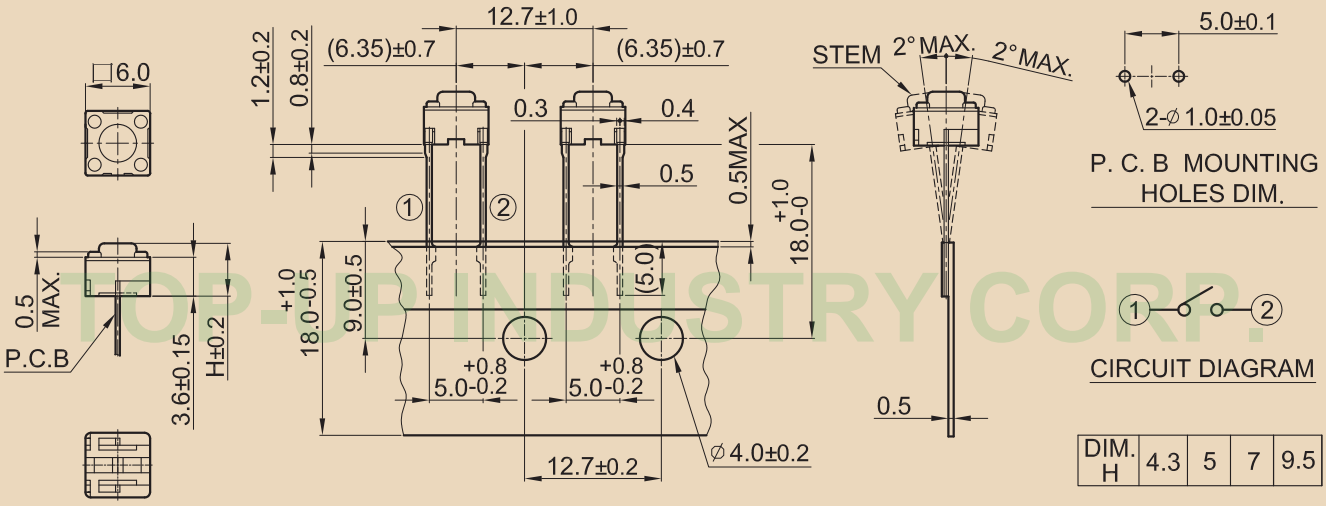

DIM. H	4.3	5	7	9.5

The drawings and specifications are for reference only. For further detail, please contact Top-up head office.

TOP-UP INDUSTRY CORP.

Tact Switch TSHP Series Code Explanation

TSHP [ ] [ ] - [ ] - [ ] [ ] [ ] - **Series NO.** - [ ]

Series Symbol

Code	Description	Life Cycle	Operating Force
TSHP (Taping)	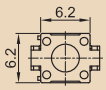	10^5 Cycles	160gf 260gf

Vertical

Code	Description
V	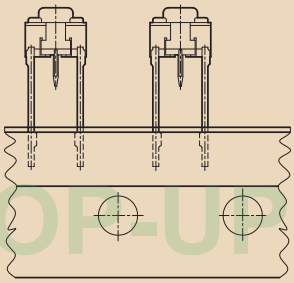

Earth Terminal

Code	Description
E	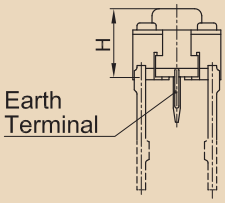

Stem Height (H)

Code	Stem height	Description
4	4.3mm	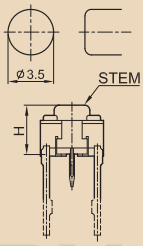
5	5mm	
7	7mm	
9.5	9.5mm	

Terminal

Code	P.C.B Type
B	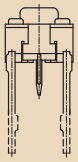

Operating Force

Code	Operating Force	Return Force
1	100±50gf	50 MIN.
2	160±50gf	50 MIN.
3	260±70gf	70 MIN.

Stem Color

Code	Description
B	Black
G	Gray
R	Red

Packing

Code	Description
Blank	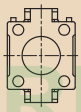
R	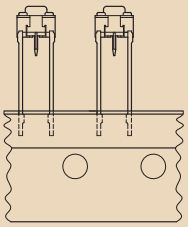

TOP-UP INDUSTRY CORP.

The drawings and specifications are for reference only. For further detail, please contact Top-up head office.

TSHPVE-B-5

Features

- 6.2X6.2mm outline size.
- The radial auto insertion machine enables automatic insertion onto printed circuit boards.
- The radial taping system of EIAJ standard is employed for switch supplying.
- 0.25mm Travel

Applications

- Operating switched in all types of electronic equipment, such as audio apparatus, office equipment, communications apparatus, measuring instruments, TV sets, VCRs, Set Top Box, ect.

Outline Drawing

TSHPVE-B-5

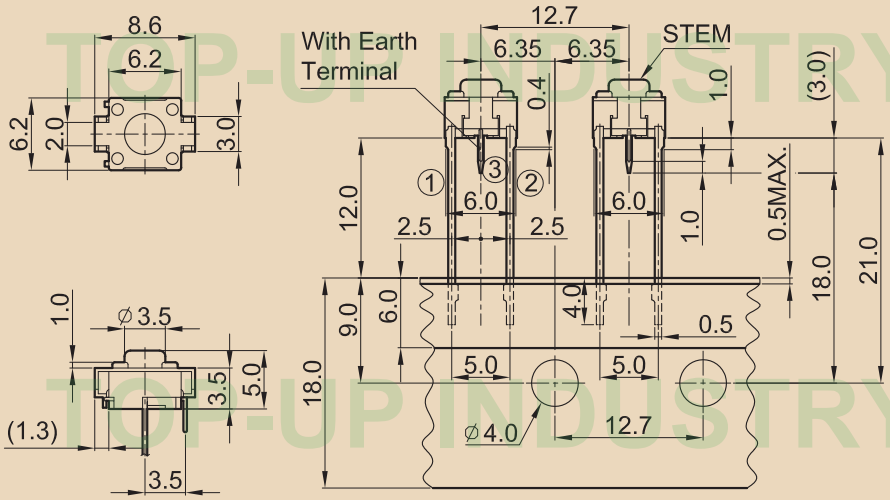

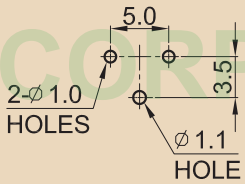

P.C.B MOUNTING HOLES DIM.

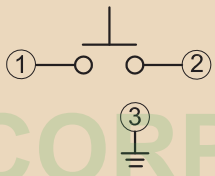

CIRCUIT DIAGRAM

DIM. H	4.3	5	7	9.5

The drawings and specifications are for reference only. For further detail, please contact Top-up head office.

Tact Switch TSHU Series Code Explanation

TSHU ☐ - ☐ - ☐ ☐ ☐ - Series NO. - ☐

Series Symbol

Code	Description	Life Cycle	Operating Force
TSHU	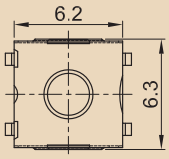	10^5 Cycles	100gf 160gf 260gf

Stem Color

Code	Description
BL	Blue
GR	Green
Y	Yellow

Ground Terminal

Code	Description
☐ Blank	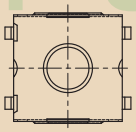
G	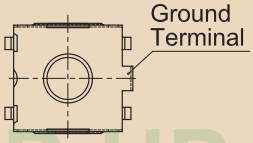

Height (H)

Code	Stem height	Description
2	2mm	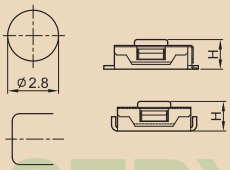
2.5	2.5mm	
3.1	3.1mm	

Operating Force

Code	Operating Force	Return Force
1	100±50gf	10 MIN.
2	160±50gf	50 MIN.
3	260±70gf	50 MIN.

Terminal

Code	SMT Type
T	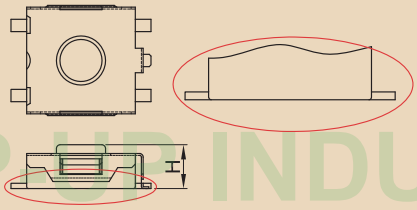
TL	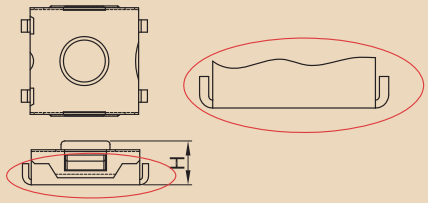

Packing

Code	Description
☐ Blank	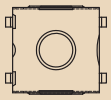
R	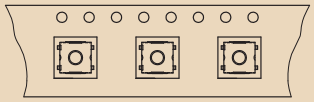

TOP-UP INDUSTRY CORP.

The drawings and specifications are for reference only. For further detail, please contact Top-up head office.

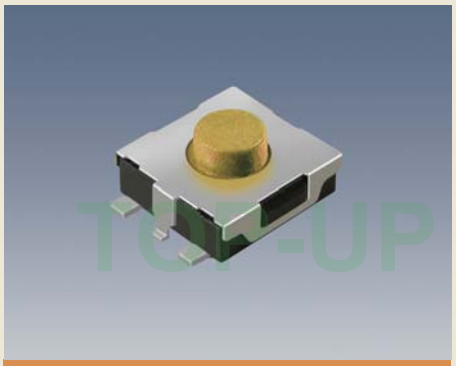

TSHUG-T

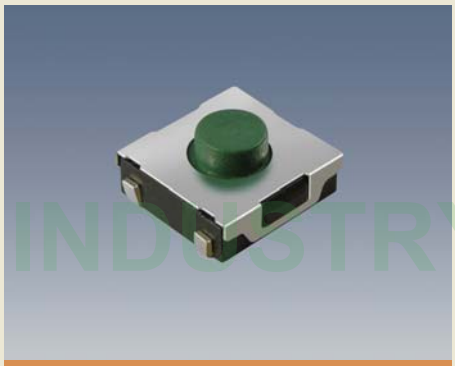

TSHU-TL

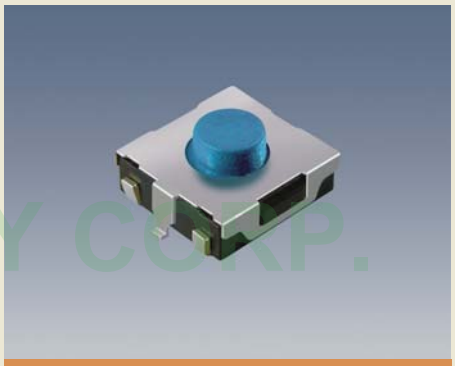

TSHUG-TL

Features

- With external dimensions of 6.2mmx6.3mm and a height of 2mm to 3.1mm these surface-mounting type tact switches are ideal for high-density mounting.
- Reflow solderable.
- Available with ground terminal for electrostatic discharge.
- Packaged with a 16 mm wide embossed taping.
- 0.25mm Travel

Applications

- Operating switches all types of electronic equipment such as audio equipment, office equipment, communication devices, measuring instruments, TV sets, VCRs, etc.

Outline Drawing

TSHUG-T

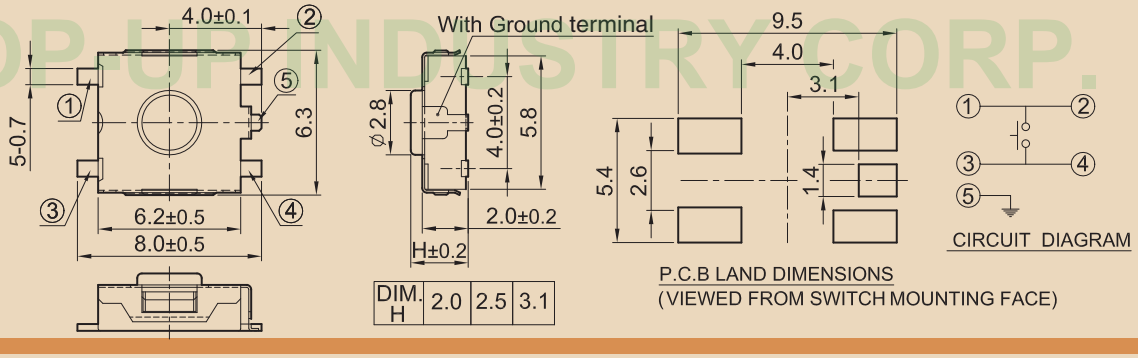

DIM. H	2.0	2.5	3.1

TSHU-TL

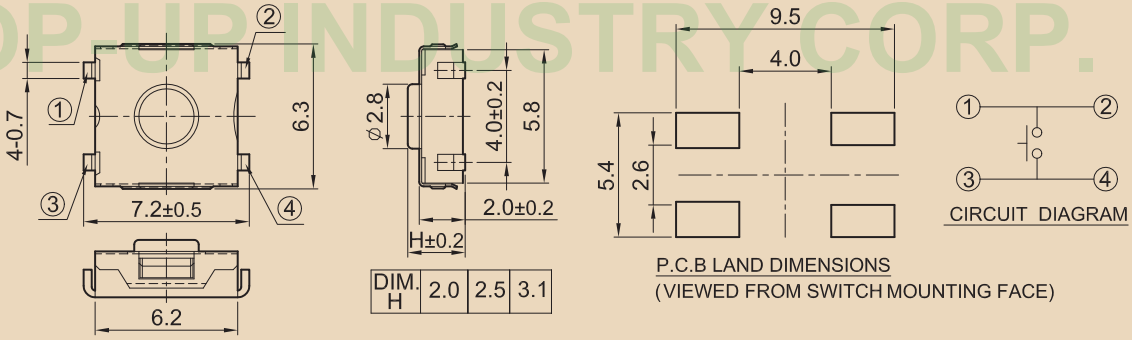

DIM. H	2.0	2.5	3.1

TSHUG-TL

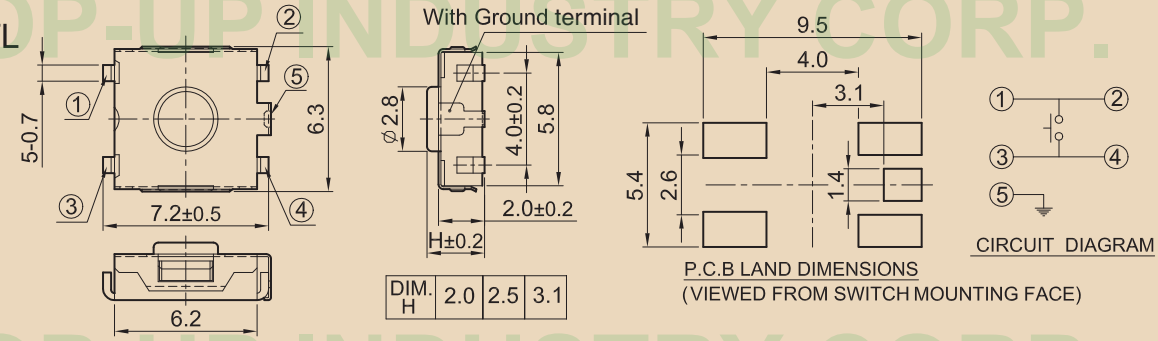

DIM. H	2.0	2.5	3.1

TOP-UP INDUSTRY CORP.

The drawings and specifications are for reference only. For further detail, please contact Top-up head office.

Tact Switch TSQG Series Code Explanation

TSQG □ - □ - □ □ □ - Series NO. - □

Series Symbol

Code	Description
TSQG	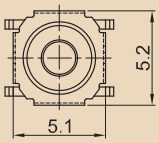
TSQR	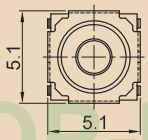

Stem Color

Code	Description
S	Silver
C	Copper

Operating Force

Code	Operating Force	Return Force
1	100±50gf	10 MIN.
2	160±50gf	50 MIN.
3	260±70gf	50 MIN.

Stem Height (H)

Code	Stem Height	Description
0.8	0.8 mm	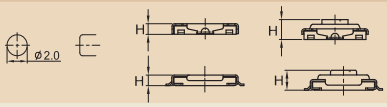
1.5	1.5 mm	

TSQG Stem

Code	Description	Life Cycle	Operating Force
A	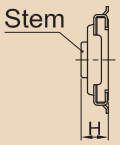	10^5 Cycles	100gf 160gf 260gf
B	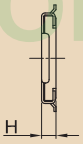	$5X10^4$ Cycles	100gf 160gf 260gf

TSQR Stem

Code	Description	Life Cycle	Operating Force
A	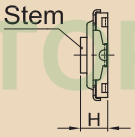	10^5 Cycles	100gf 160gf 260gf
B	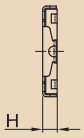	$5X10^4$ Cycles	100gf 160gf 260gf

Terminal

Code	SMT Type
T (TSQG)	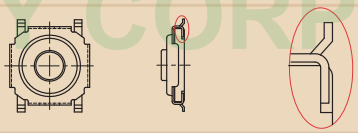
TJ (TSQR)	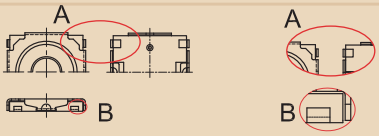

Packing

Code	Description
□ Blank	
R	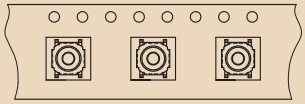

The drawings and specifications are for reference only. For further detail, please contact Top-up head office.

TOP-UP INDUSTRY CORP.

TSQGA-T-1.5

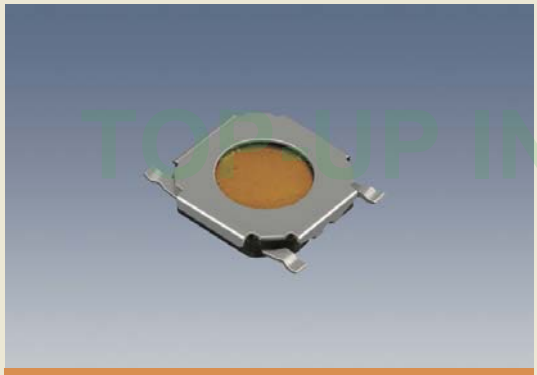

TSQGB-T-0.8

Features

- With external dimension of 5.1mmx5.2mm and a height of 0.8 mm or 1.5 mm, these surface-mounting type switches are ideal for high-density mounting.
- Offers low profile and light-weight compared with conventional models.
- Available in a 0.8 mm thin flat type and an easy-to-use stem type.
- Contact sealed construction offers high reliable switch.
- Reflow solderable.
- 0.25mm Travel
- Packaged with a 12mm wide embossed taping.

Applications

- Operation of electronic equipmen, such as audio equipment, home electronics, VCRs, radio communication and car electronics,etc.

Outline Drawing

TSQGA-T-1.5

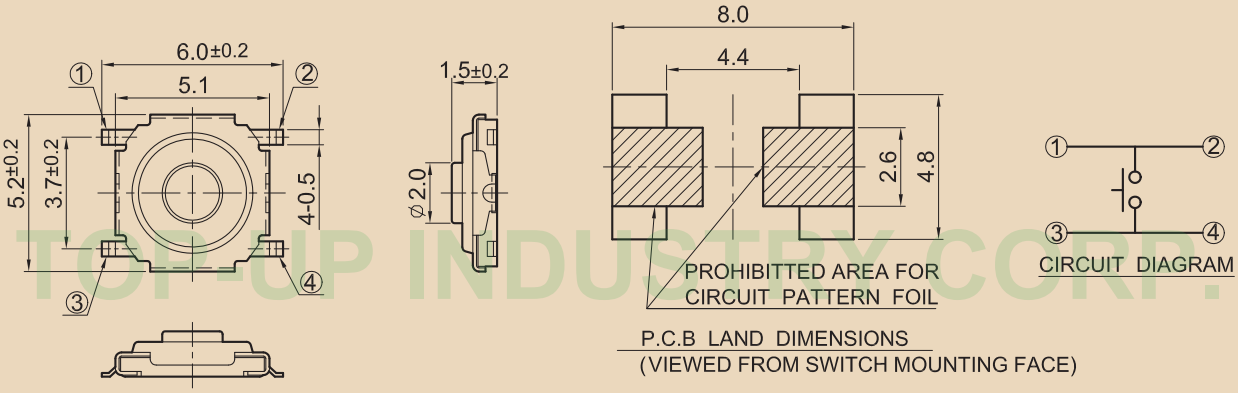

TSQGB-T-0.8

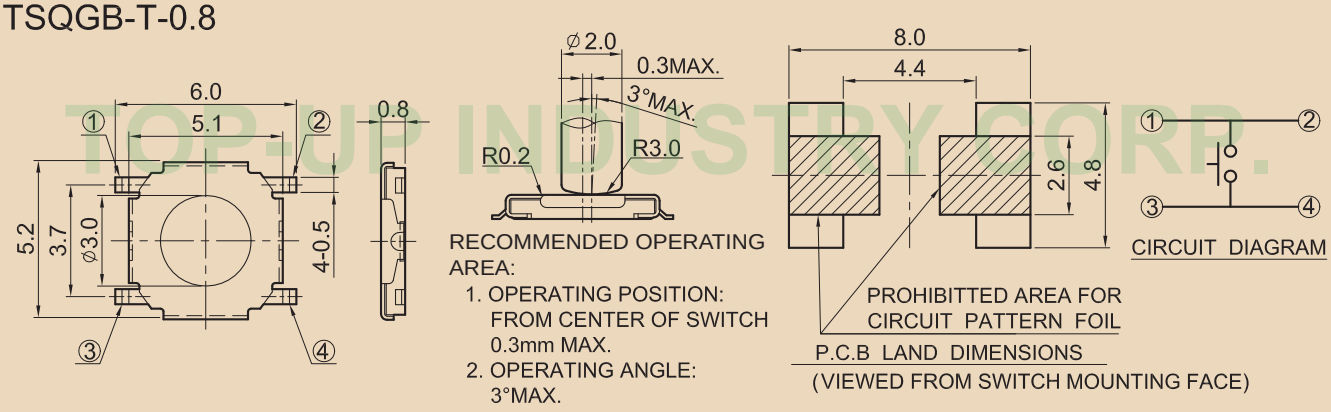

The drawings and specifications are for reference only. For further detail, please contact Top-up head office.

TOP-UP INDUSTRY CORP.

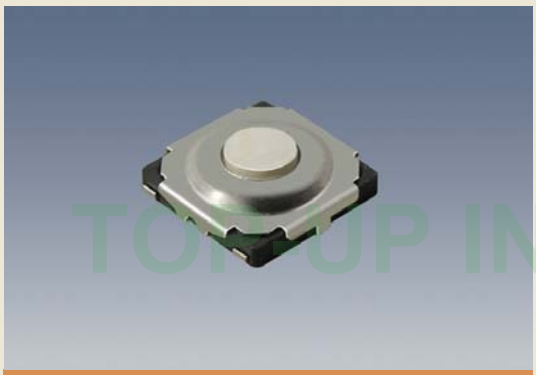

TSQRA-TJ -1.5

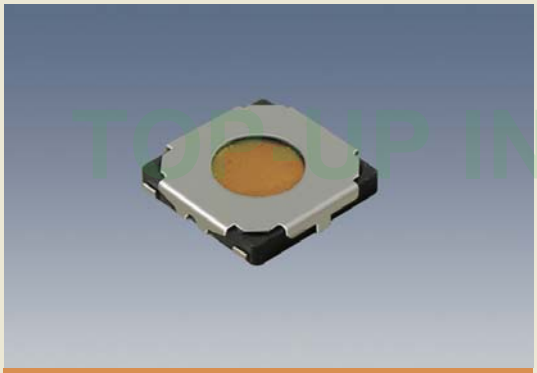

TSQRB-TJ -0.8

Features

- With external 5.1mmx5.1mm and a height of 0.8 mm or 1.5 mm, these surface-mounting type switches are ideal for high-density mounting.
- Offers low profile and lightweight compared to conventional models.
- Available in a 0.8mm thin flat type and easy-to use stem type.
- Contact sealed construction offers a high reliable switch.
- Reflow solderable.
- 0.25mm Travel.
- Package with a 12mm wide embossed taping.

Applications

- Operation switches in all types of electronic equipment, such as audio equipment, home electronics, VCRs, radio communication and car electronics,etc.

Outline Drawing

TSQRA-TJ -1.5

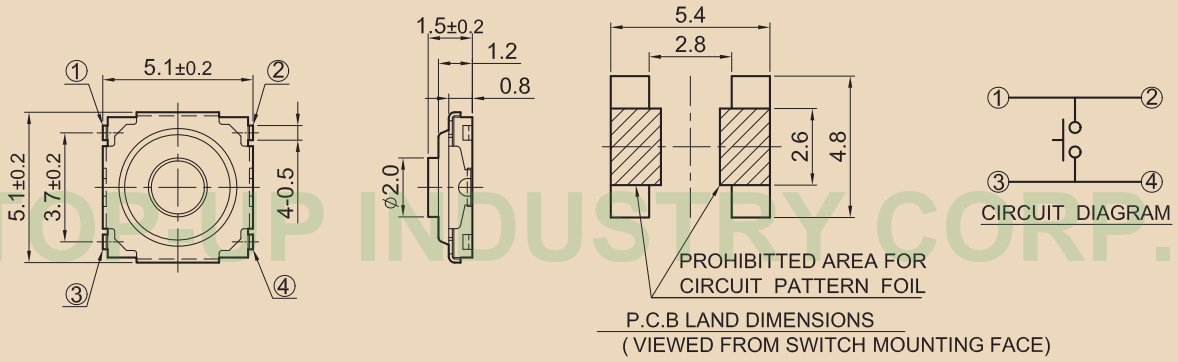

TSQRB-TJ -0.8

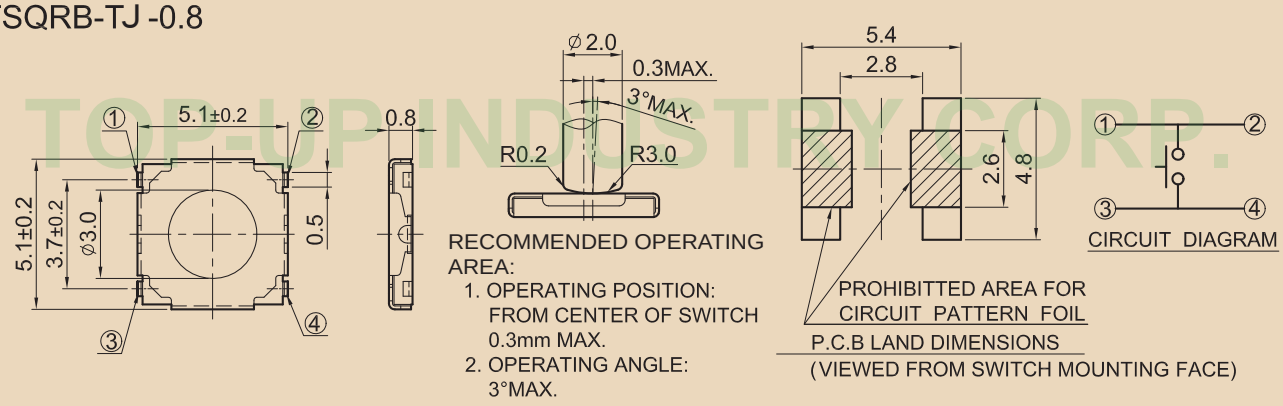

TOP-UP INDUSTRY CORP.

The drawings and specifications are for reference only. For further detail, please contact Top-up head office.

Tact Switch TSQDY Series Code Explanation

TSQDY □ - □ - □ □ □ - Series NO. - □

Series Symbol

Code	Description	Life Cycle	Operating Force
TSQDY	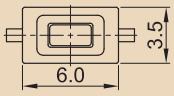	5X10⁴ Cycles	100 gf 160 gf 260 gf 320 gf 500 gf

Operating Force

Code	Operating Force	Return Force
1	100±50gf	10 MIN.
2	160±50gf	50 MIN.
3	260±70gf	50 MIN.
4	320±70gf	50 MIN.
5	500±80gf	50 MIN.

Ground Terminal

Code	Description
□ Blank	
G	

Stem Height (H)

Code	Stem Height	Description
2	2 mm	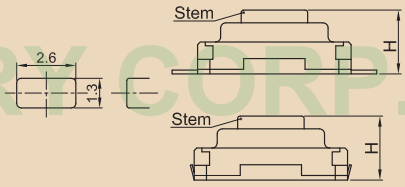
2.5	2.5 mm	
4.3	4.3 mm	

Terminal

Code	SMT Type
T	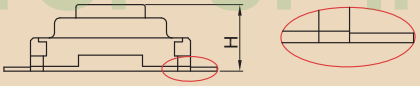
TL	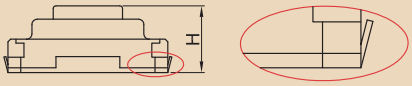

Stem Color

Code	Description
BL	Blue
GR	Green
W	White
Y	Yellow
B	Black
G	Gray

Packing

Code	Description
□ Blank	
R	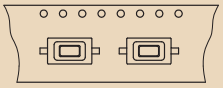

The drawings and specifications are for reference only. For further detail, please contact Top-up head office.

TOP-UP INDUSTRY CORP.

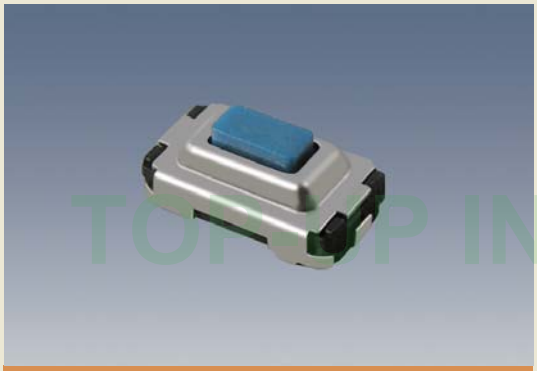

TSQDY-TL-2.5

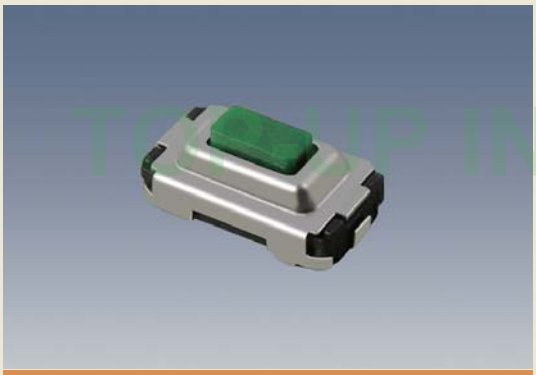

TSQDYG-TL-2.5

Features

- With a 6.0 mmX3.5 mm outline dimensions and a 2.5 mm to 4.3mm height, these surface-mounting type keyboard switches are ideal for high-density mounting.
- High reliability provided with sealed contacts.
- Expansion of the top face of the stem speeds up mounting.
- Reflow solderable.
- Packaged with a 16mm wide embossed taping.
- 0.25 Travel

Applications

- Operating switches are used in all types of electronic equipment such as audio apparatus, office equipment communications apparatus, measuring instrument, TV sets, VCRs, Set Top Box, etc.

Outline Drawing

TSQDY-TL-2.5

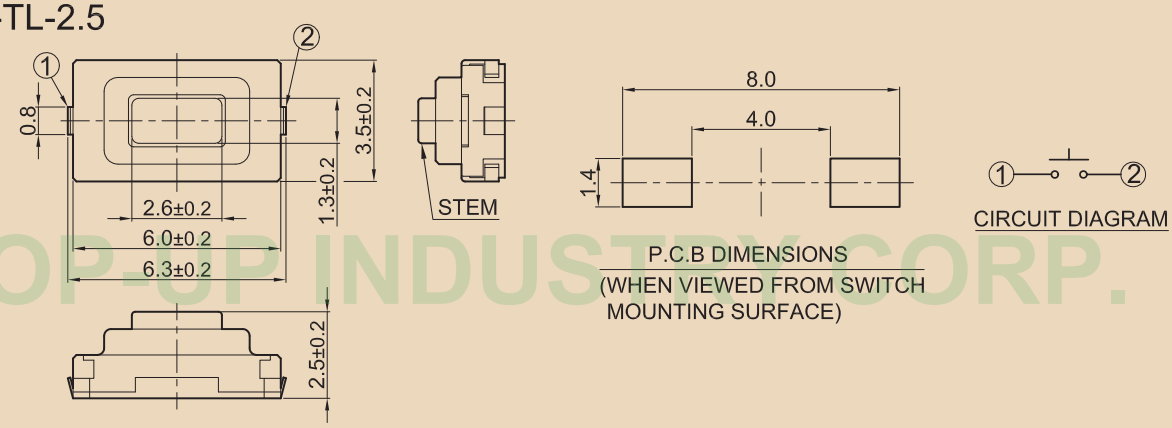

TSQDYG-TL-2.5

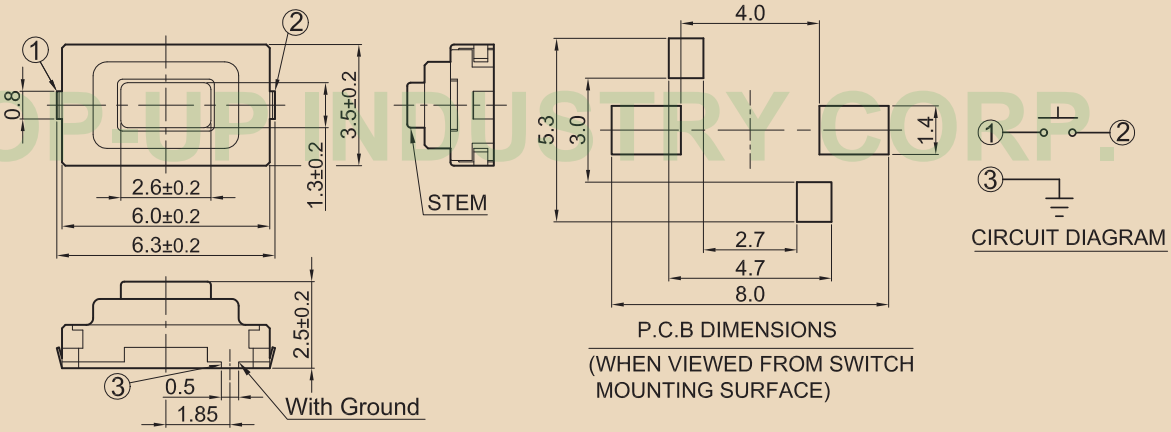

TOP-UP INDUSTRY CORP.

The drawings and specifications are for reference only. For further detail, please contact Top-up head office.

TSQDY-T-2.5

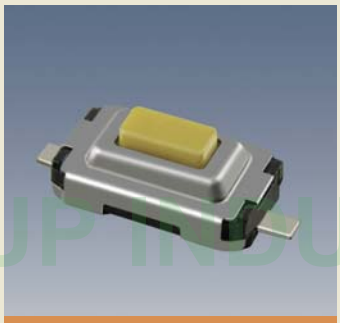

TSQDYG-T-2.5

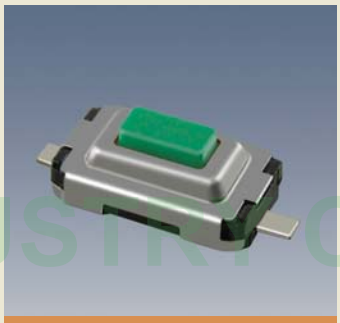

TSQDY-T-4.3

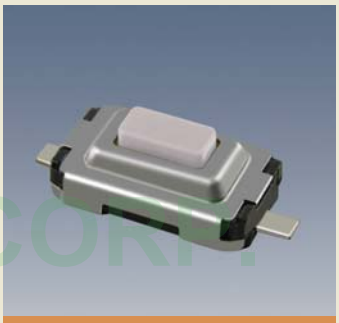

TSQDYG-T-4.3

Outline Drawing

TSQDY-T-2.5

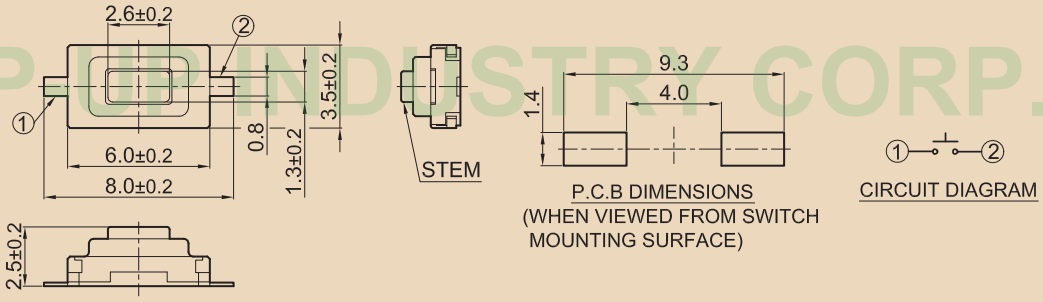

TSQDYG-T-2.5

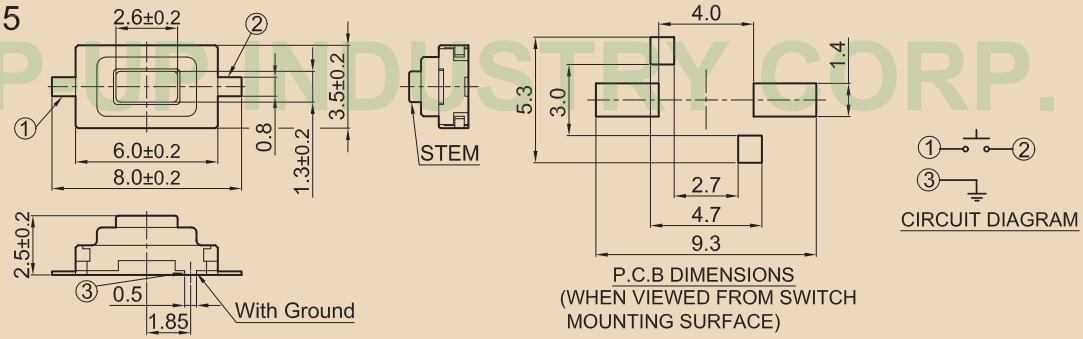

TSQDY-T-4.3

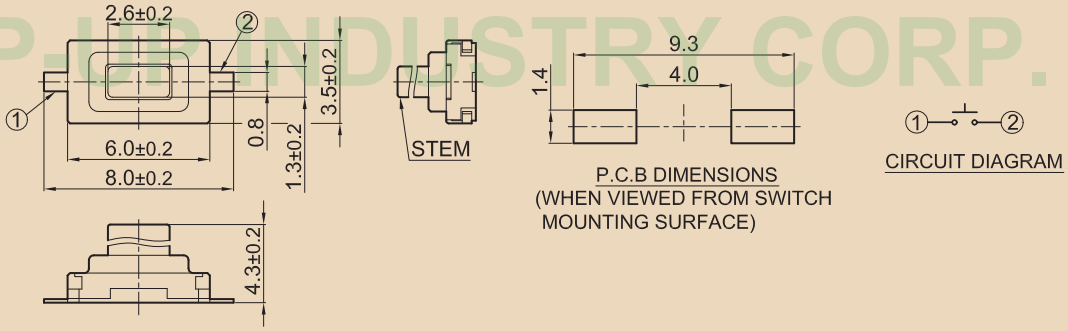

TSQDYG-T-4.3

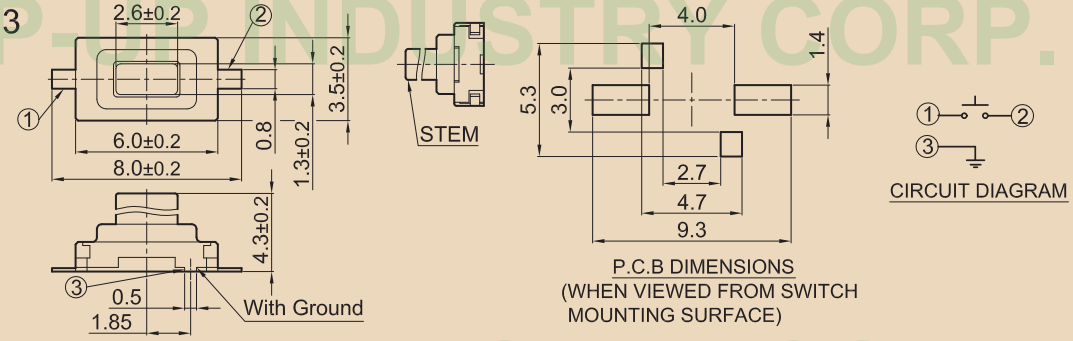

TOP-UP INDUSTRY CORP.

The drawings and specifications are for reference only. For further detail, please contact Top-up head office.

Tact Switch TSRB / TSRR Series Code Explanation

TSRB □ - □ - □ □ □ - **Series NO.** - □

Series Symbol

Code	Description	Life Cycle	Operating Force
TSRB	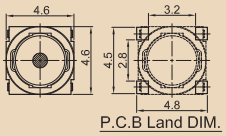 P.C.B Land DIM.	$5X10^5$ Cycles	160 gf
		$5X10^4$ Cycles	260 gf
TSRR	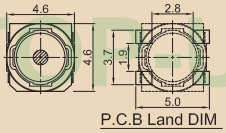 P.C.B Land DIM	$5X10^5$ Cycles	160 gf
		$5X10^4$ Cycles	260 gf

Operating Force

Code	Series	Operating Force	Return Force
2	TSRB TSRR	160±50gf	50 MIN.
3	TSRB TSRR	260±70gf	50 MIN.
11	TSRB	200±50gf	50 MIN.
15	TSRB	240±20gf	50 MIN.

Without Stem

Code	Series	Description
B	TSRB	Operating Part
B	TSRR	Operating Part

Stem Color

Code	Description
GR	Green
BL	Blue
W	Whith
B	Black
O	Orange

Terminal

Code	Series	SMT Type
TJ	TSRB	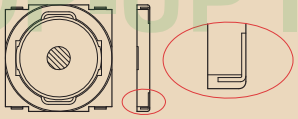
TJ	TSRR	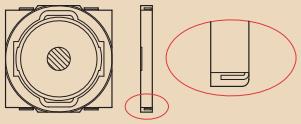

Product Height (H)

Code	Series	Description
0.55	TSRB	0.55 mm
0.5	TSRR	0.5 mm

Packing

Code	Description
□ Blank	
R	

TOP-UP INDUSTRY CORP.

The drawings and specifications are for reference only. For further detail, please contact Top-up head office.

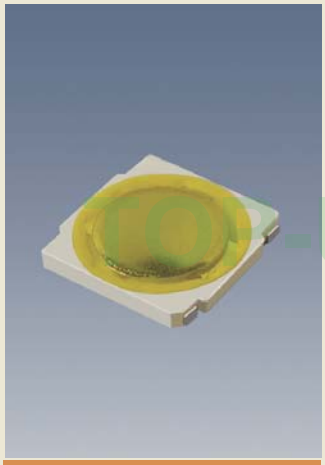

TSRBB-TJ-0.55

Features

- Dimensions: 4.6mm x4.6mmx0.55mm(H). Surface-mounting type is suitable for identification.
- High reliability achieved through application of a dustproof structure.
- Insulation sheet covering the operating section of the switches allows operation on the plated key top.
- Advantageous for achieving a compact and light-weight unit.
- Reflow solderable.
- Switches are delivered in the 12 mm wide embossed taping system.
- 0.2mm Travel

Applications

- Designed for portable telephone sets, transceivers,VCR units, cameras that require low-profile and light-weight design.
- Designed for controls of diversified types of audio equipment.

Outline Drawing

TSRBB-TJ-0.55

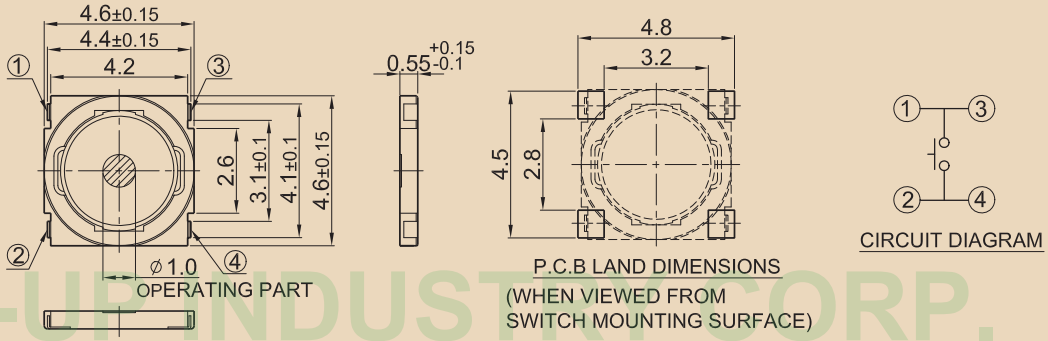

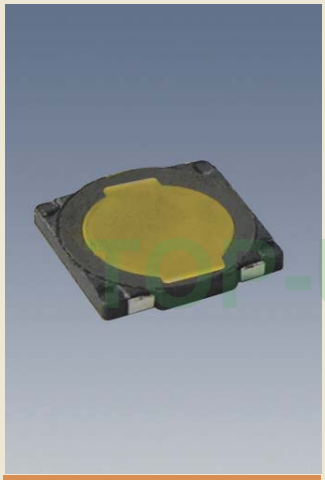

TSRRB-TJ-0.5

Features

- Dimensions:4.6mmx4.6mmx0.5mm(H). Surface mounting type is suitable for identification.
- High reliability achieved through application of a dustproof structure.
- Insulation sheet covering the operating section of the switches allows operation on the plated key top.
- Advantageous for achieving a compact and light-weight unit.
- Reflow solderable.
- 0.2mm Travel
- Switches are delivered in the 12mm wide embossed taping system.

Applications

- Designed for portable telephone sets, transceivers, VCR units, cameras that require low-profile and light-weight design.
- Designed for controls of diversified types of audio equipment.

Outline Drawing

TSRRB-TJ-0.5

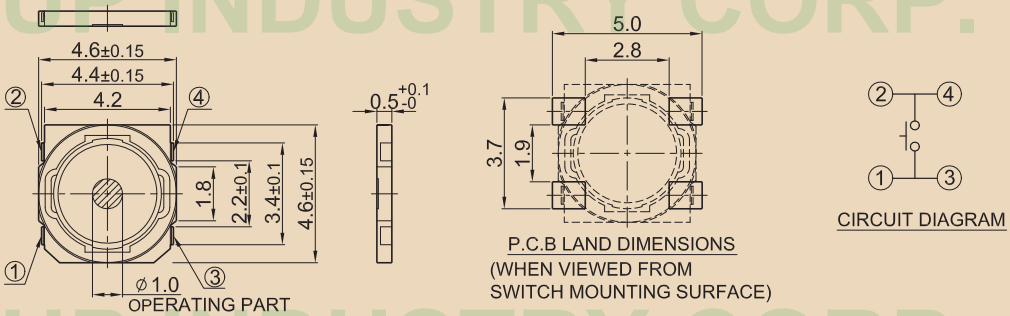

TOP-UP INDUSTRY CORP.

The drawings and specifications are for reference only. For further detail, please contact Top-up head office.

Tact Switch TSRE Series Code Explanation

TSRE □ - □ - □ □ □ - **Series NO.** - □

Series Symbol

Code	Description	Life Cycle	Operating Force
TSRE (Horizontal)	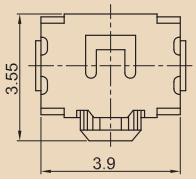	10X10⁴ Cycles	160 gf 220 gf

Guide Bosses

Code	Description
A	Without Guide Bosses 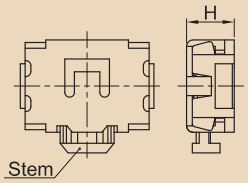
B	With Guide Bosses 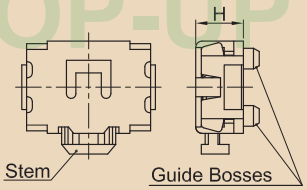

Operating Force

Code	Operating Force
2	160^{+70}_{-40} gf
3	220±70gf

Stem Color

Code	Description
B	Black

Terminal

Code	Description
T	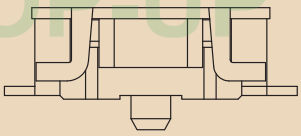
TL	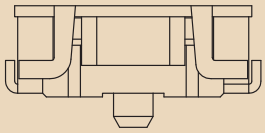

Height (H)

Code	Height
1.5	1.5 mm

Packing

Code	Description
Blank	
R	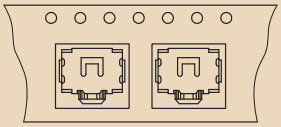

TOP-UP INDUSTRY CORP.

The drawings and specifications are for reference only. For further detail, please contact Top-up head office.

TSRE□-TL-1.5

TSRE□-T-1.5

Features

- With dimensions of 3.9mm x3.55mm and a height of 1.5mm, these surface-mounting type keyboard switches are ideal for high density mounting.
- Horizontal type, capable of operating in the direction horizontal to the PC board.
- Packaged with a 12mm wide embossed taping.
- High reliability achieved with sealed contacts.
- 0.3mm Travel

Applications

- Portable electronic equipment.
- MP3 and cellular phones.
- Communications devices.

Outline Drawing

TSRE□-TL-1.5

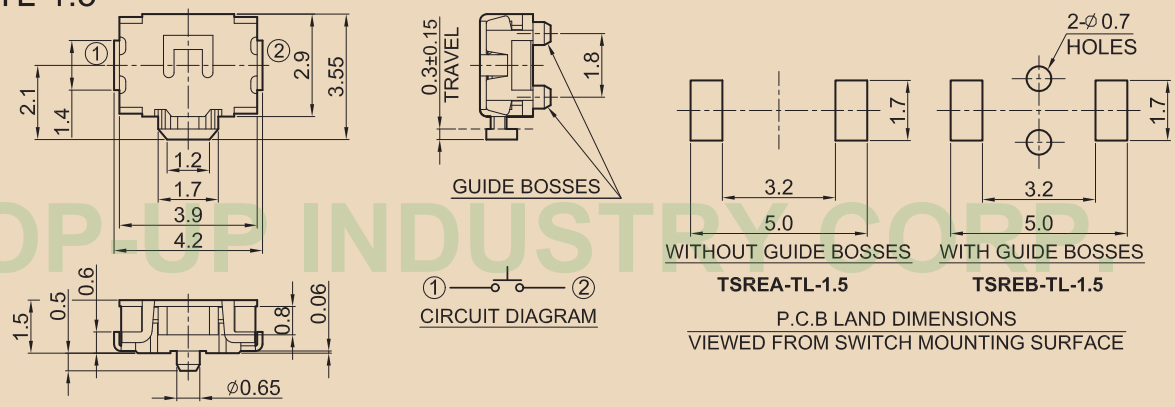

TSRE□-T-1.5

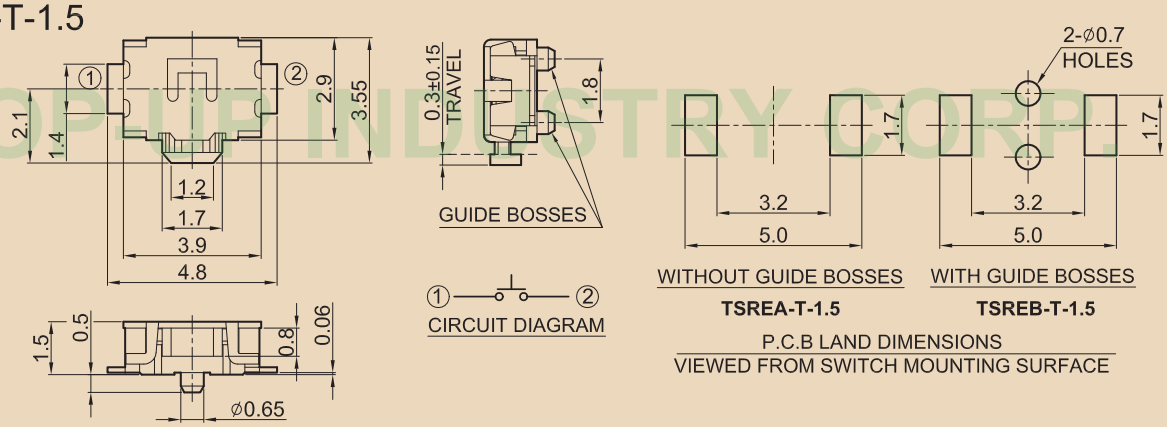

TOP-UP INDUSTRY CORP.

The drawings and specifications are for reference only. For further detail, please contact Top-up head office.

TOP-UP Tact Switch TSRK / TSRP / TSRT Series Code Explanation

TSRK □ - □ - □ □ □ - Series NO. - □

Series Symbol

Code	Description	Life Cycle	Operating Force
TSRK	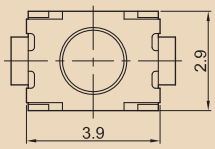	10X10⁴ Cycles	100 gf 160 gf 260 gf
TSRP	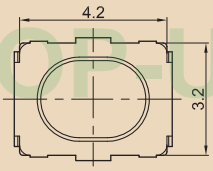	10X10⁴ Cycles 10X10⁴ Cycles	160 gf 400 gf 260 gf
TSRT (Horizontal)	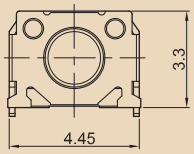	10X10⁴ Cycles	160 gf

Stem Color

Code	Operating
B	Black
G	Gray
I	Ivory
W	White

Operating Force

Code	Operating Force	Return Force
1 (TSRK)	100±50gf	
2 (TSRK)	160 +70 -40 gf	
2 (TSRP)	160±50gf	50 MIN.
3 (TSRP)	260±70gf	70 MIN.
4 (TSRP)	400±100gf	100 MIN.
2 (TSRT)	160±50gf	50 MIN.

Stem Height (H)

Code	Stem Height
1.5 (TSRK)	1.5mm
2 (TSRK)	2.0mm
2.5 (TSRP)	2.5mm
3.4 (TSRT)	3.4mm

Packing

Code	Description
□ Blank	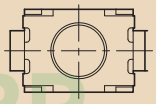
R	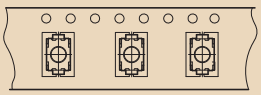

Guide Bosses

Code	Without Guide Bosses	Code	With Guide Bosses
A (TSRK)	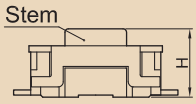	B (TSRK)	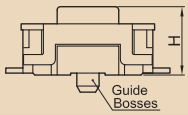

Code	Without Guide Bosses
A (TSRP)	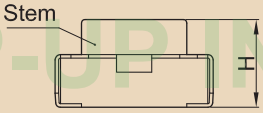

Code	Without Guide Bosses	Code	With Guide Bosses
A (TSRT)	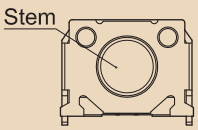	B (TSRT)	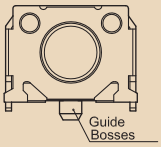

Terminal

Code	SMT Type	Code	SMT Type
T (TSRK)	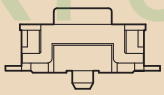	TL (TSRT)	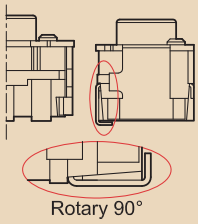
TL (TSRP)	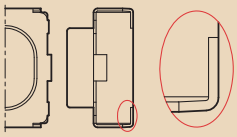		

The drawings and specifications are for reference only. For further detail, please contact Top-up head office.

TOP-UP INDUSTRY CORP.

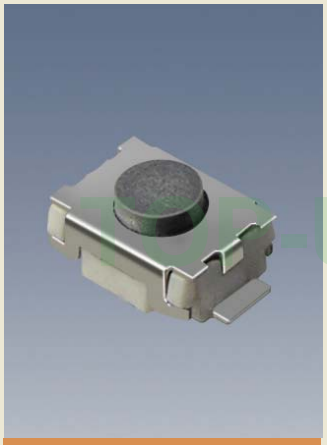

TSRK□-T

Features

- Compact sized, low-profile type with 3.9mmx2.9mm outline dimensions and a 1.5mm to 2.0mm height.
- Small size improves the mounting density of components on the PC board.
- Reflow solderable.
- Packaged with a 12mm wide embossed taping.
- 0.13～0.15mm Travel

Applications

- Portable audio.
- Cellular phones and personal digital assistances.
- Keyless entry system.
- Operation of various digital devices.

Outline Drawing

TSRK□-T

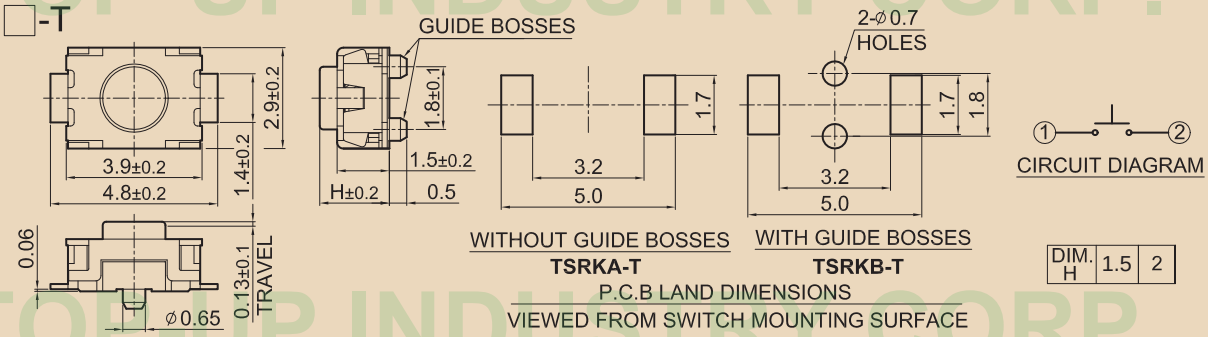

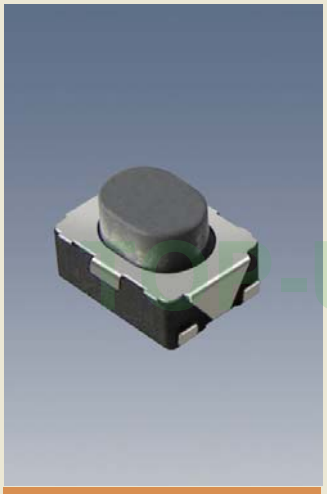

TSRPA-TL-2.5

Features

- Surface mount type with outer dimensions measuring 4.2mmx3.2mmx2.5mm(H), suitable for high-density mounting.
- Its compact size contributes to set miniaturization and weight reduction.
- Greater force required for operation, in accordance with in vehicle application needs, prevents accidental operation.
- Large stem upper surface area. Excels in operable and mount ability.
- Packaged with a 12mm wide embossed taping.
- 0.2 Travel

Applications

- Car audio, car navigation systems.
- Keyless entry systems.
- Operation of computerized audio equipment, in vehicle units, communications equipment, and measuring instruments.

Outline Drawing

TSRPA-TL-2.5

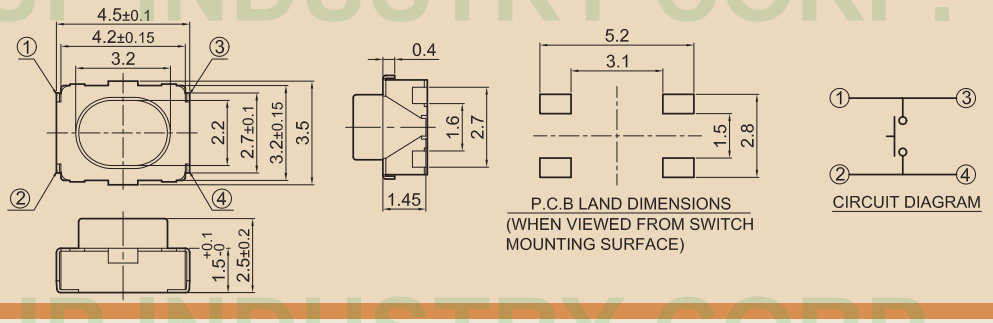

TOP-UP INDUSTRY CORP.

The drawings and specifications are for reference only. For further detail, please contact Top-up head office.

TSRTA-TL-3.4

Features

- Surface mounting type with external dimensions 4.45(W)x3.3(D)x3.4(H)mm.
- Horizontal type, operable in a direction parallel to the PC board.
- Reflow solderable.
- Packaged with a 12mm wide embossed taping.
- 0.2mm Travel

Applications

- Portable devices.
- Cellular phones and Personal Digital Assistants.
- Operation of various digital devices.

Outline Drawing

TSRTA-TL-3.4

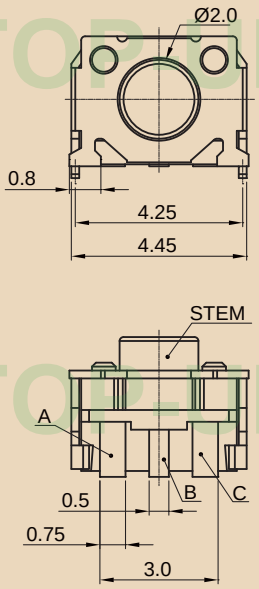

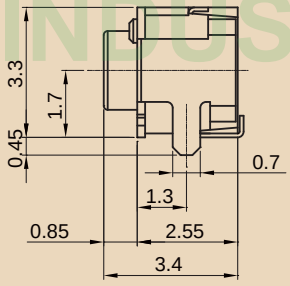

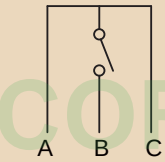

CIRCUIT DIAGRAM

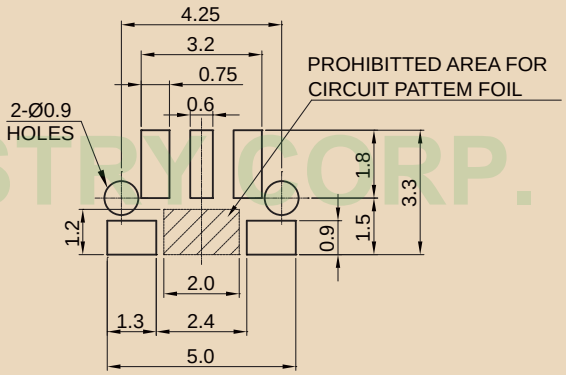

PRINTED CIRCUIT BOARD DIMENSIONS
(WHEN VIEWED FROM SWITCH MOUNTING SURFACE)

TOP-UP INDUSTRY CORP.

The drawings and specifications are for reference only. For further detail, please contact Top-up head office.

TOP-UP INDUSTRY CORP.

www.globalsources.com/topup.co

www.top-up.com.tw

8F, NO.189, YUNG AN RD.,TAOYUAN TAIWAN, R.O.C.

:886-3-3380787 (REP.)

:886-3-3380767

E-mail :sales@top-up.com.tw

skype top-up.1

All rights reserved

No:S161000