SLIDE
POTENTIOMETER
ATTENUATOR
Wire Wound Attenuator

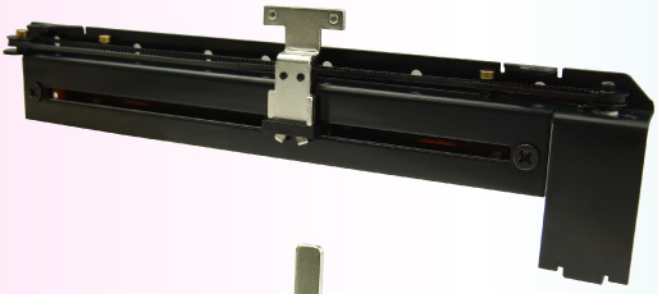

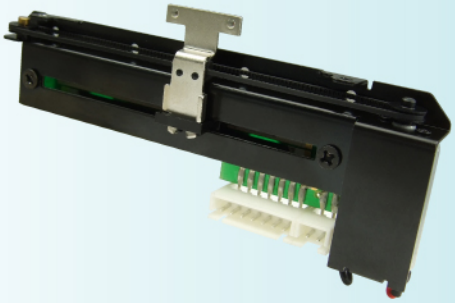
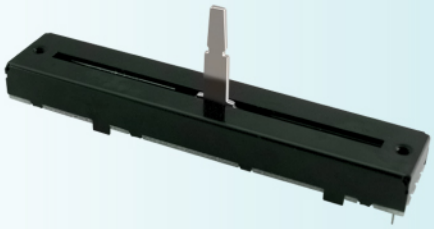
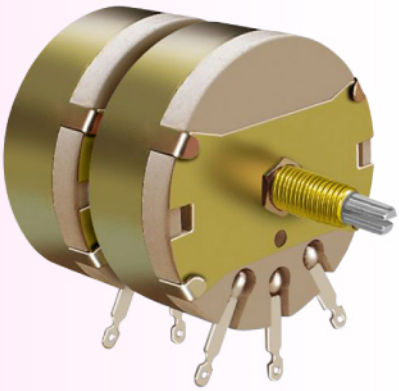

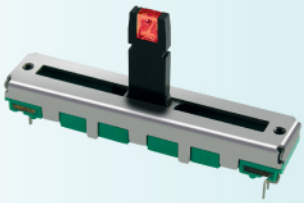

TOP-UP INDUSTRY CORP.
www.globalsources.com/topup.co
www.top-up.com.tw

Slim Type Slide Potentiometer (J Series)

Page

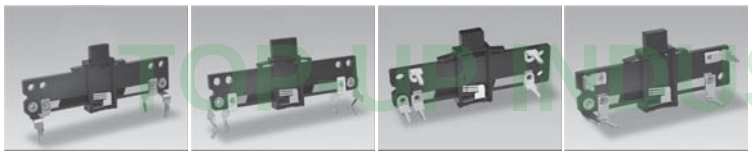

176

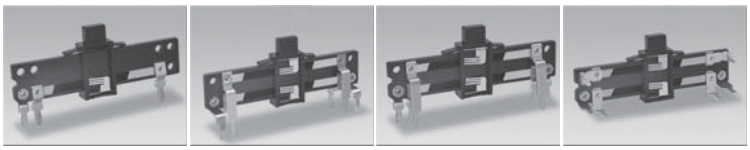

177

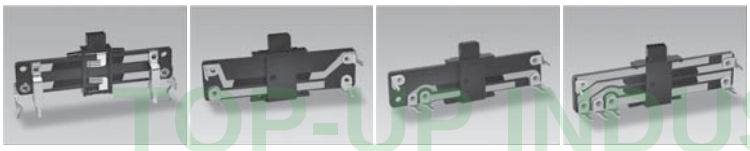

178

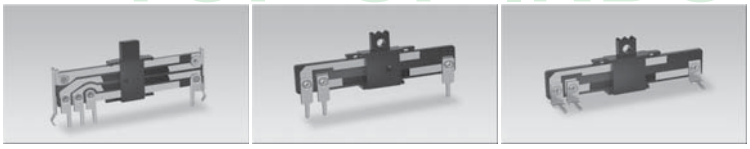

179

Slim Type Slide Potentiometers (AS Series)

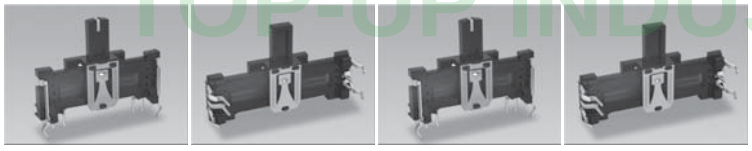

181

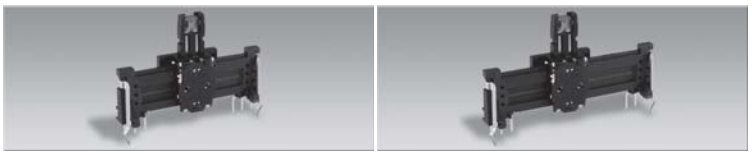

182

Miniature Type Slide Potentiometers (TE , TQ Series)

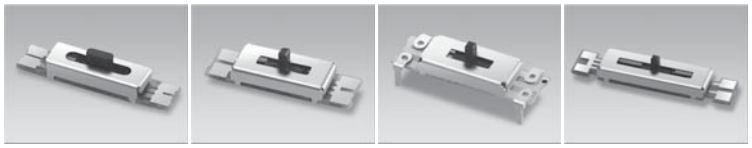

186

Miniature Type Slide Potentiometers (TE , TQ Series)

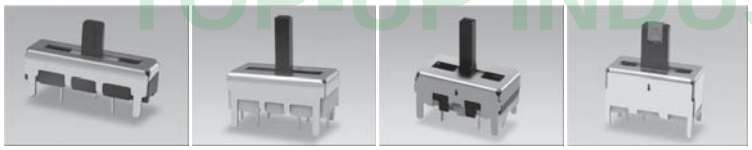

187

Standard Type Slide Potentiometers (TU Series)

188

TOP-UP INDUSTRY CORP.

Standard Type Slide Potentiometers (LA Series)

Page

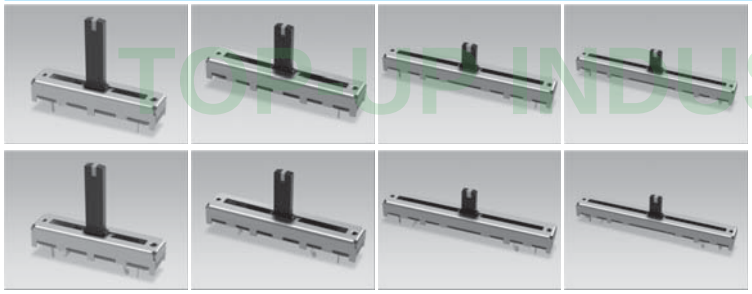

190
191

Standard Type Slide Potentiometers (TM Series)

193

Standard Type Slide Potentiometers (TN Series)

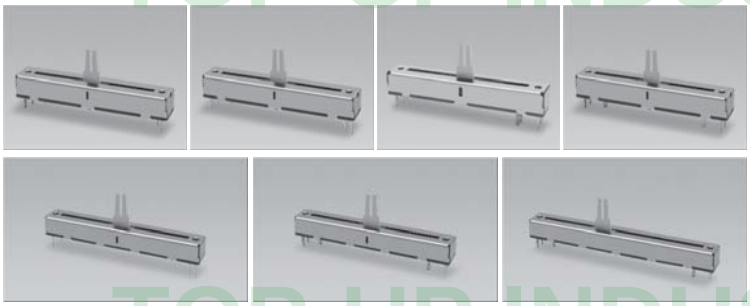

197
198

Standard Type Slide Potentiometers (LP , LD Series)

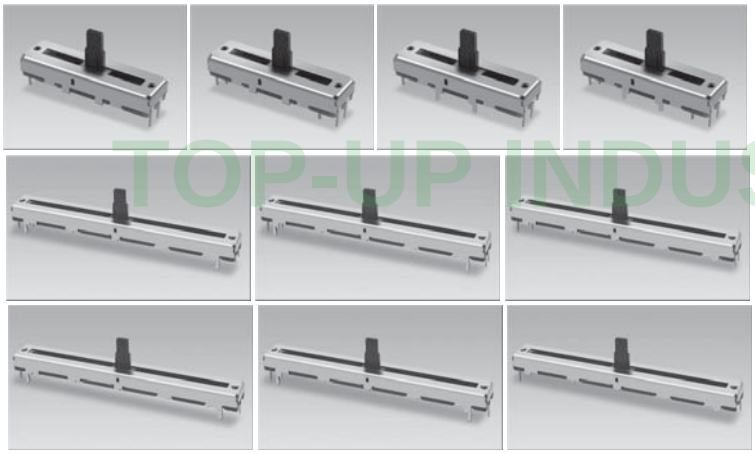

202
203
204

TOP-UP INDUSTRY CORP.

The drawing and specification are for reference only. For further detail, please contact Top-Up head office.

Standard Type Slide Potentiometers (AP Series)

Page

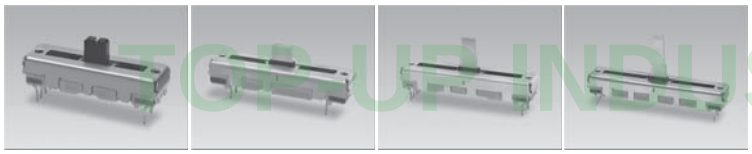

207

208

209

With Luminous Lever 210

Standard Type Slide Potentiometers (AM, AN Series)

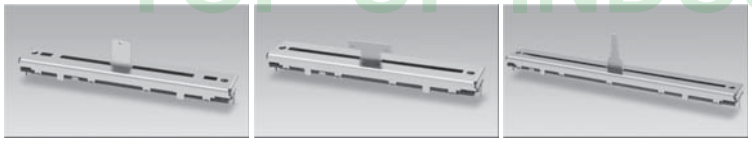

212

Special Low-Profile Master Type Slide Potentiometers (AM, AN Series)

213

214

Special Rail Type Slide Potentiometers (RF Series)

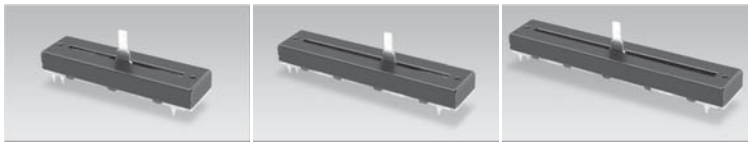

216

TOP-UP INDUSTRY CORP.

Special Rail Type Slide Potentiometers (RF Series)

Page

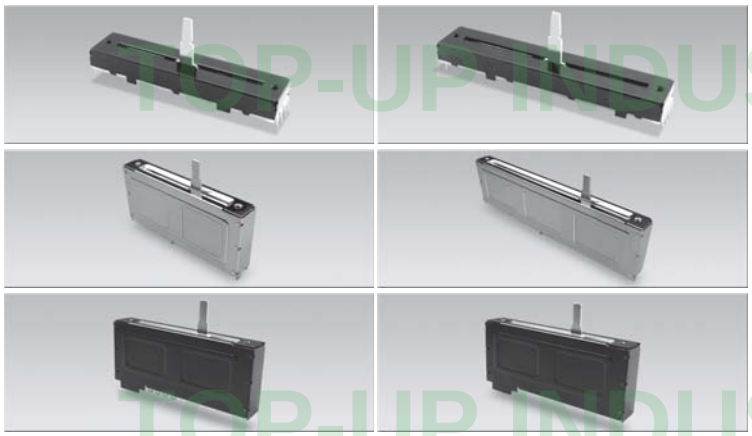

217
218
219

Special Motorized Type Slide Potentiometers (AM/RF Series)

221
222
223

Attenuator

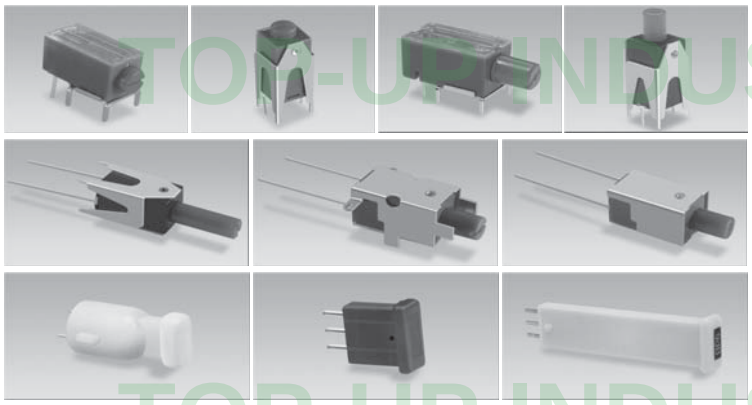

225
226
227

Wire Wound Attenuator Series (AT Series)

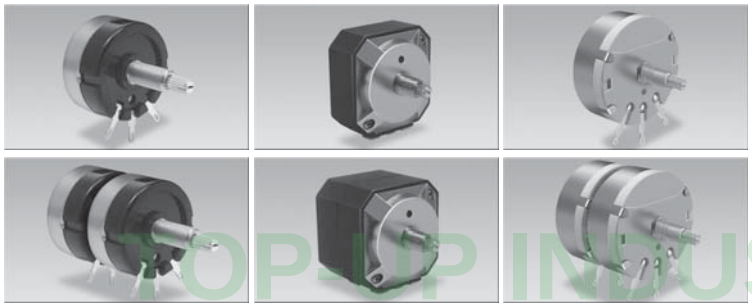

229
230

TOP-UP INDUSTRY CORP.

The drawing and specification are for reference only. For further detail, please contact Top-Up head office.

J Series Code Explanation

T	JX	1	-	B	-	J	W	12	-	B	10K	-	1C	-	□□□
1	2	3		4		5	6	7		8	9		10		11

1. T: Travel of Sliding (10mm, 15mm, 20mm, 25mm are available)
2. Product Lines of J
   Without Case Type Slide Potentiometers : JX Series; JY Series; JZ Series; JW Series
3. Number of Unit
   1 — Single Unit
   2 — Dual Unit
4. Type of Terminal

P.C.B Type

JX Series

Single Unit

B

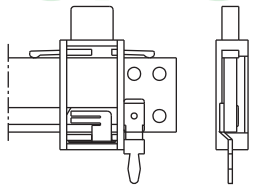

B1

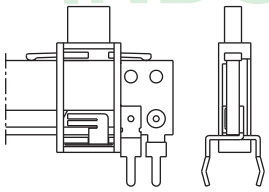

B2

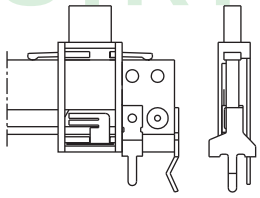

C

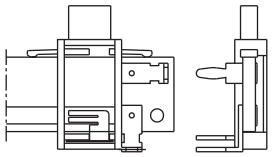

Dual Unit

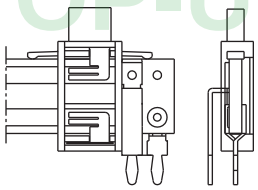

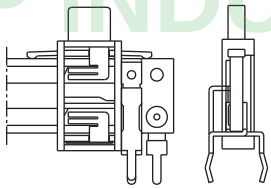

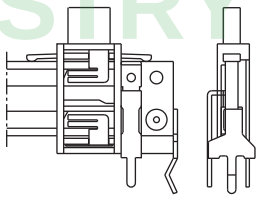

C1

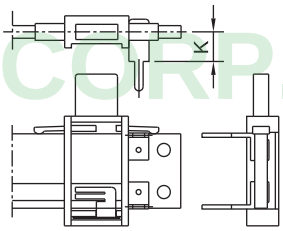

Terminal	C1	C2	C3
K	3.5	6.3	9.3

JY Series

B

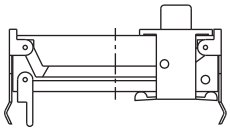

C

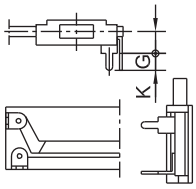

Terminal	C	C1	C2	C3
K	2.5	2.2	4.6	3.25
G	2.5	3	3	3

C1

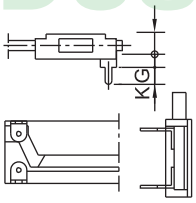

JZ Series

B

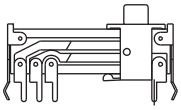

C

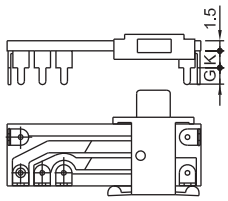

Terminal	C	C1	C2
K	2.5	2.2	4.6
G	2.5	3	3

TOP-UP INDUSTRY CORP.

J Series Code Explanation

T	JX	1	-	B	-	J	W	12	-	B	10K	-	1C	-	□□□
1	2	3		4		5	6	7		8	9		10		11

4. Type of Terminal

P.C.B type				
JW Series (Single Unit)				
B				C
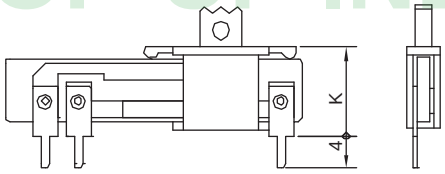				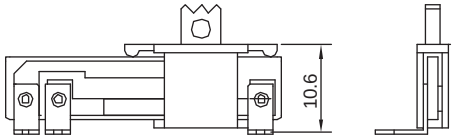
Terminal	B	B1	B2	
K	10.8	11.8	10.3	

5. Lever Type: (See Drawing Type of Insulated Lever)
6. Metal Color of Lever Type "J": R-Red, G-Green, O-Orange, W-White Color are Available
7. Lever Dimensions (See Drawing: Insulated Lever Type)
8. Type of Taper (See Taper Chart Page 220)
9. Resistance Value
10. Number of Clicks: Blank - None, 1C- Center Click
11. Serial No.

Type of Insulated Lever

Model	JW1 Series						JZ1, JZ2,JY1 Series					JX Series
Lever -Type	GB			G			G			H		GA
Dimensions	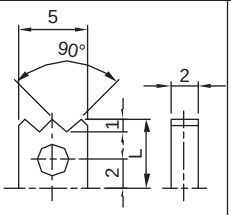			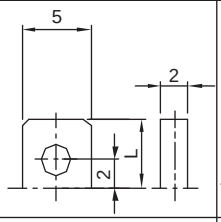			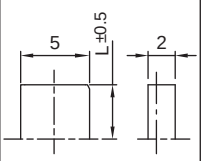			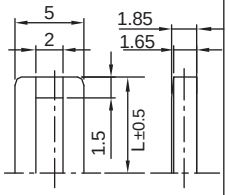		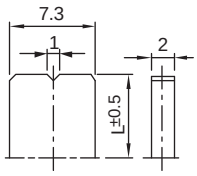
Length(L)	5			4						7		7
Model	JX1, JX2 Series											
Lever -Type	G			C			B			J		GJ
Dimensions	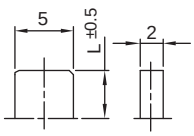			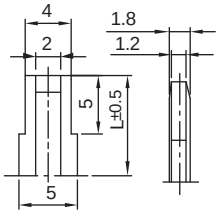			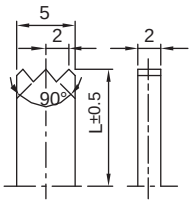			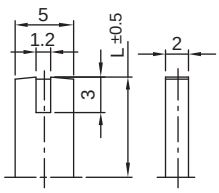		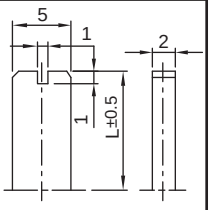
										8.5	10	12	
Length(L)	3.4	4	5.5	8.5	12	15	10			15	17	20	10

The drawing and specification are for reference only. For further detail, please contact Top-Up head office.

Electrical Characteristics:

Total resistance	500Ω to 1MΩ						
Resistance tolerance	±20%						
Resistance taper	A, B, C, D, W						
Rated wattage	Taper \ Travel		15mm	20mm	30mm	45mm	60mm
	B	Single	0.05	0.1	0.2	0.25	0.2
		Dual	0.025	0.05	0.1	0.125	0.2
	Except B	Single	0.025	0.1	0.1	0.125	0.1
		Dual	0.012	0.025	0.05	0.06	0.1
Rated voltage	B		100	200	200	200	200
	Except B		50	150	150	150	150
Insulation resistance	500Ω to 1MΩ						
Dielectric	1 min. at 250V AC						

Mechanical Characteristics:

Operating force	10~120gf.cm
Lever stop strength	3kg/60 SEC(2mm point from mounting surface)
Lever wobble	1.6mm Max(both sides)
Click slip-out force (Only center click)	Operating force+20~150gf.cm

Durability

Sliding life	10,000 cycles

Number Of Click(detent)

Click (detent)	Model
Center click	Series
3. Click (3C)	None
7. Click (7C)	None
11. Click (11C)	None

TOP-UP INDUSTRY CORP.

TJX1-B1	TJX1-B2	TJX1-C1	TJX1-C

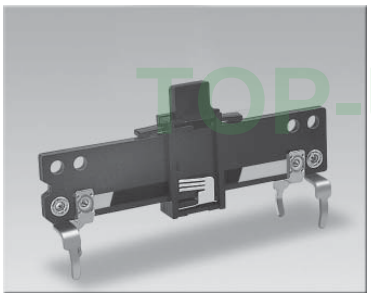
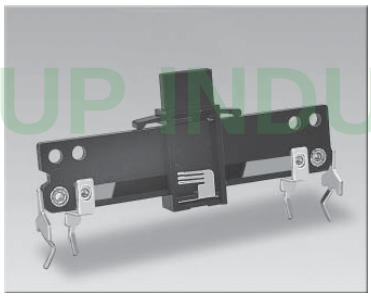
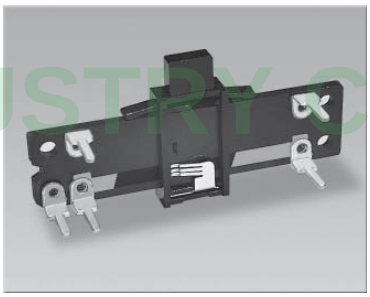
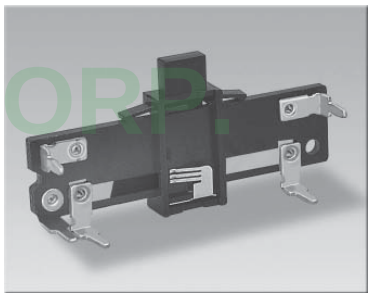

Outline Drawing | Features individual specifications

TJX1-B1

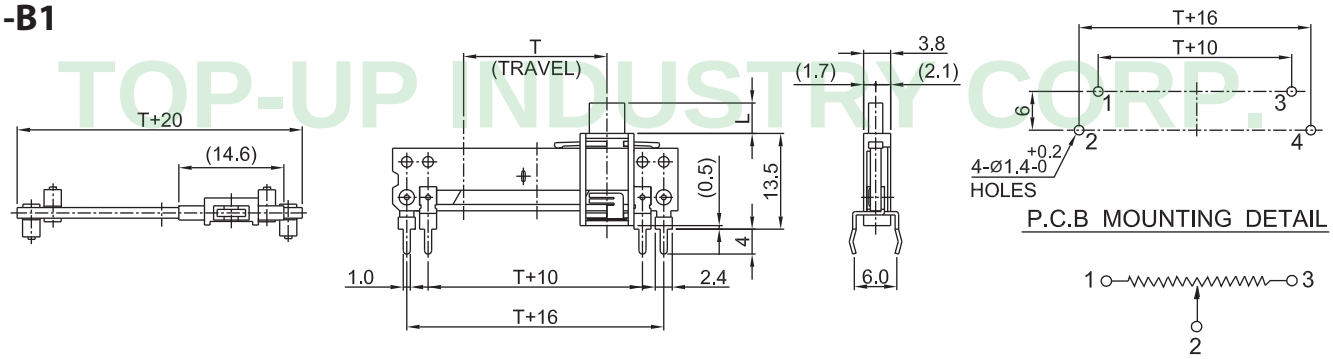

TJX1-B2

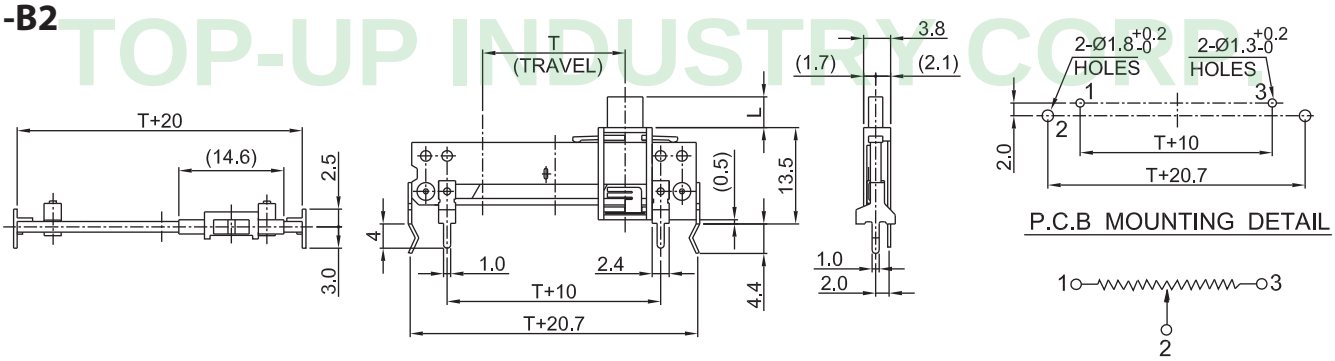

TJX1-C1

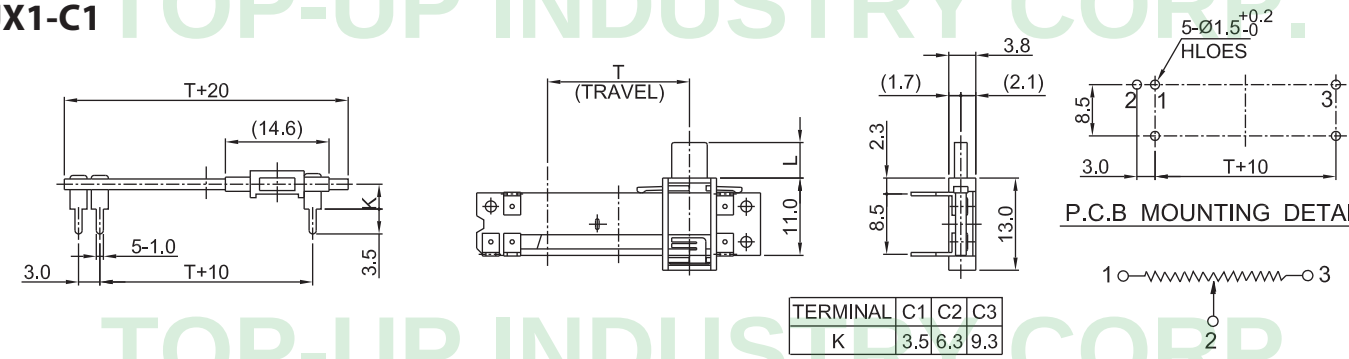

TERMINAL	C1	C2	C3
K	3.5	6.3	9.3

TJX1-C

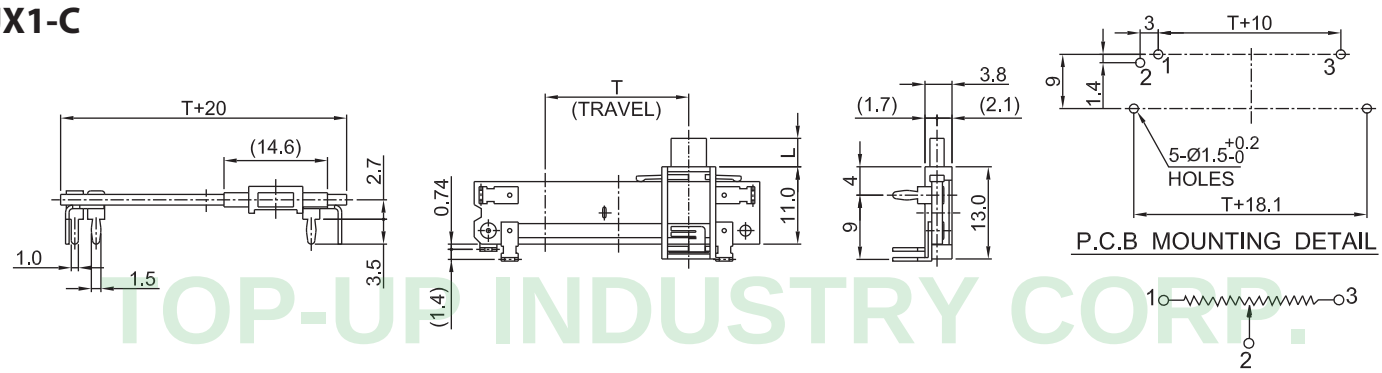

The drawing and specification are for reference only. For further detail, please contact Top-Up head office.

TJX1-B	TJX2-B1	TJX2-B	TJX2-C

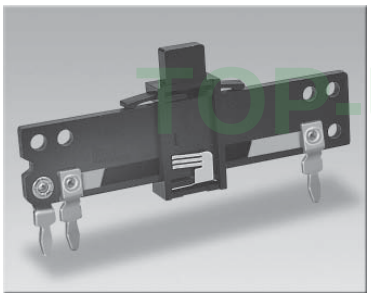
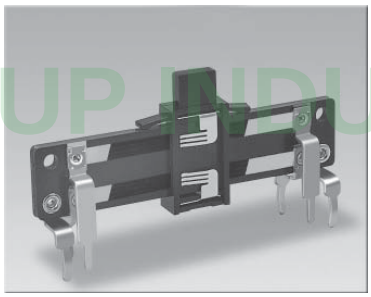
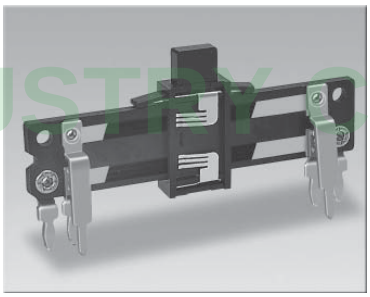
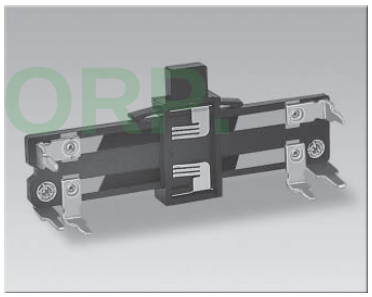

Outline Drawing | Features individual specifications

TJX1-B

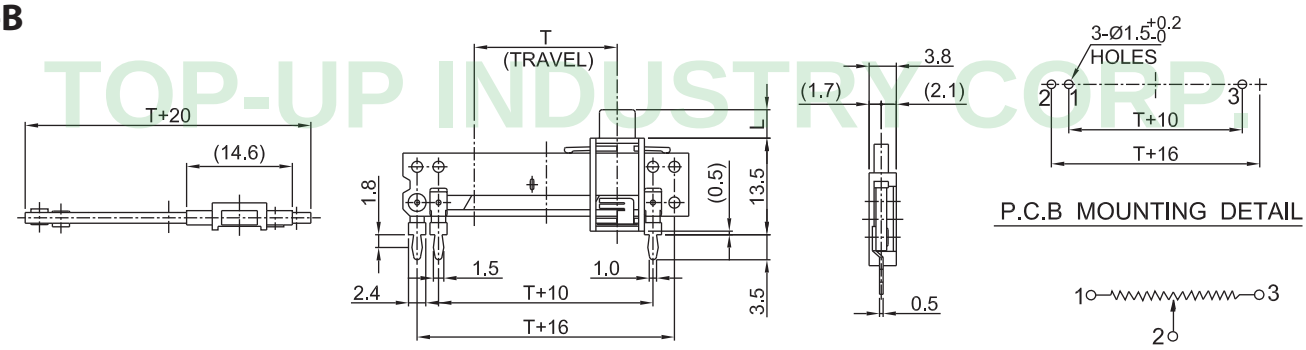

TJX2-B1

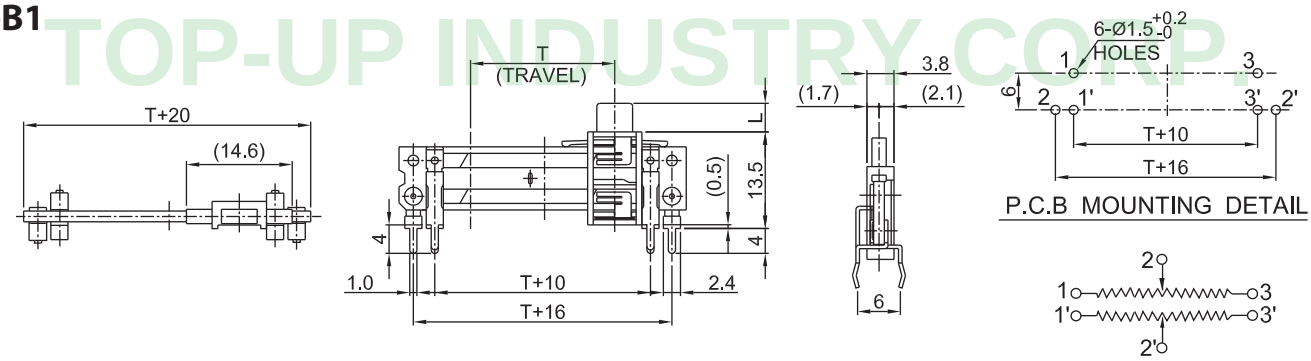

TJX2-B

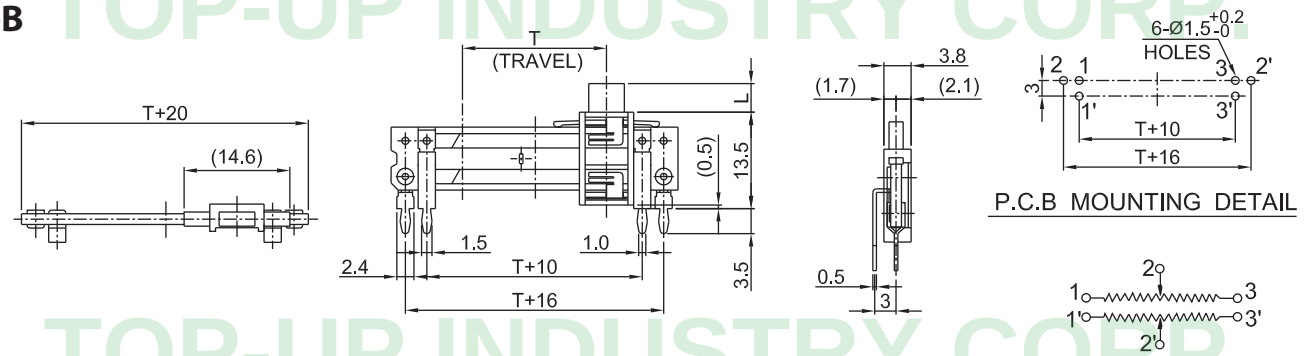

TJX2-C

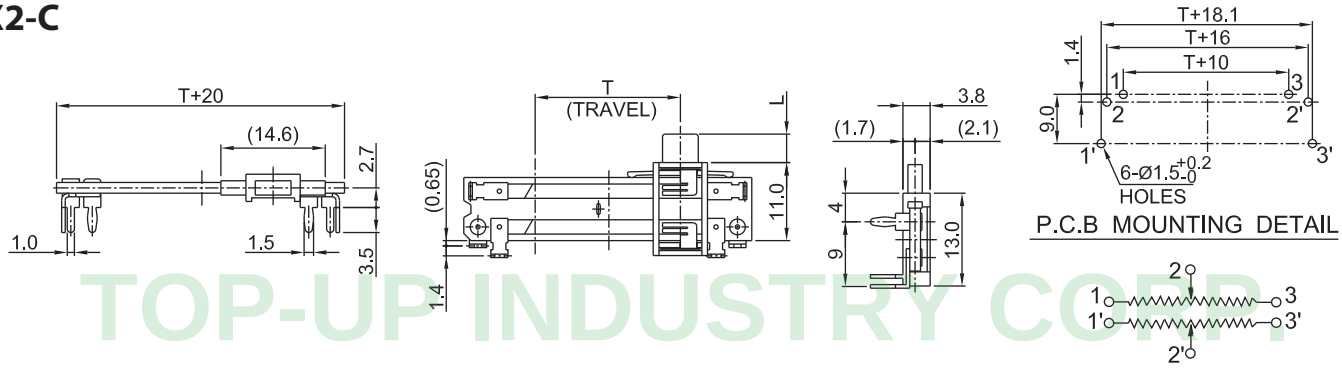

TOP-UP INDUSTRY CORP.

TJX2-B2	TJY1-C	TJZ1-C	TJZ2-C

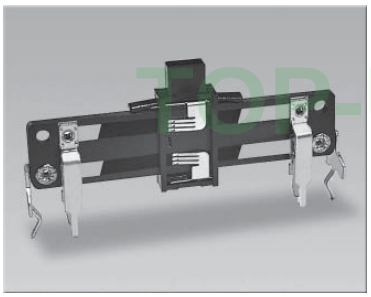
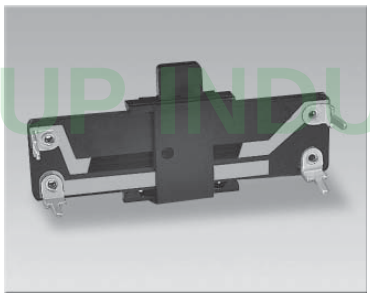
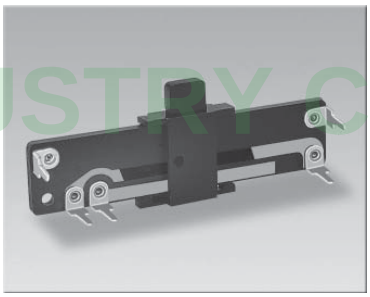
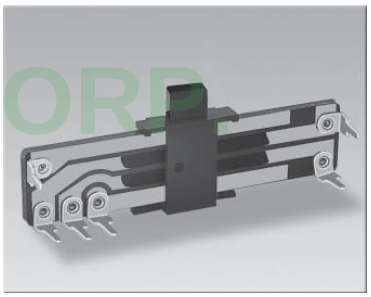

Outline Drawing | Features individual specifications

TJX2-B2

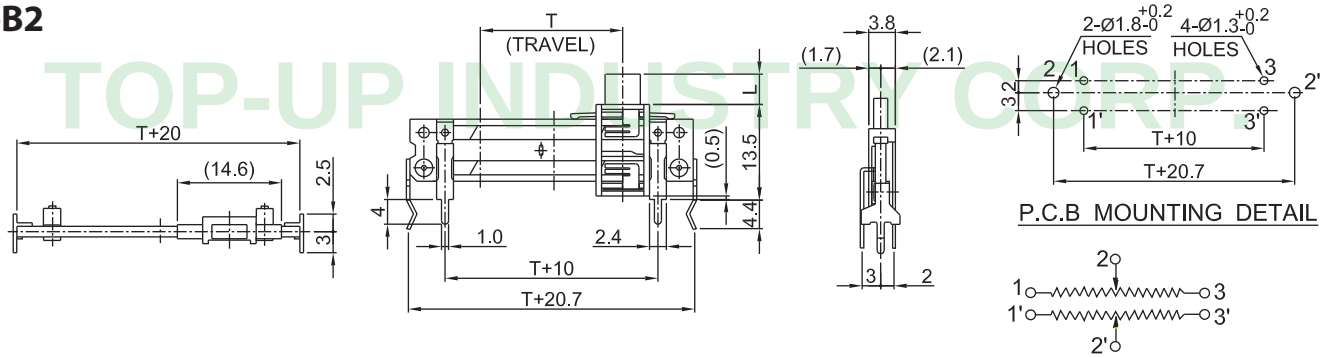

TJY1-C

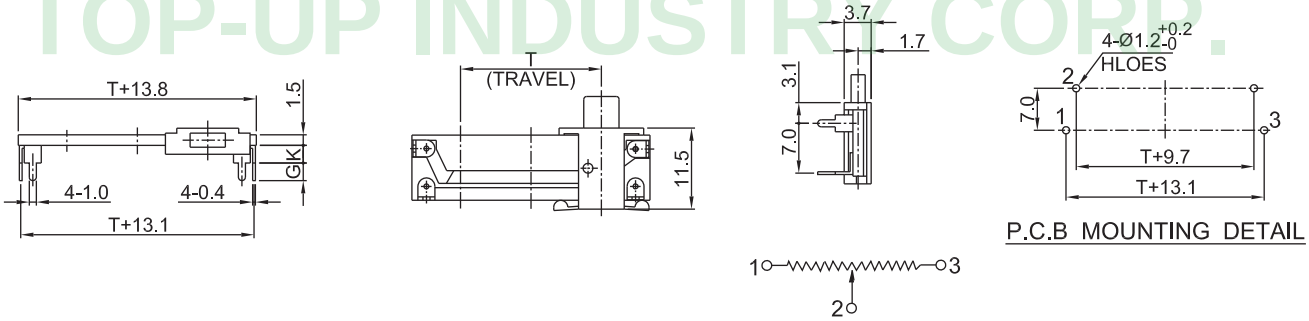

TJZ1-C

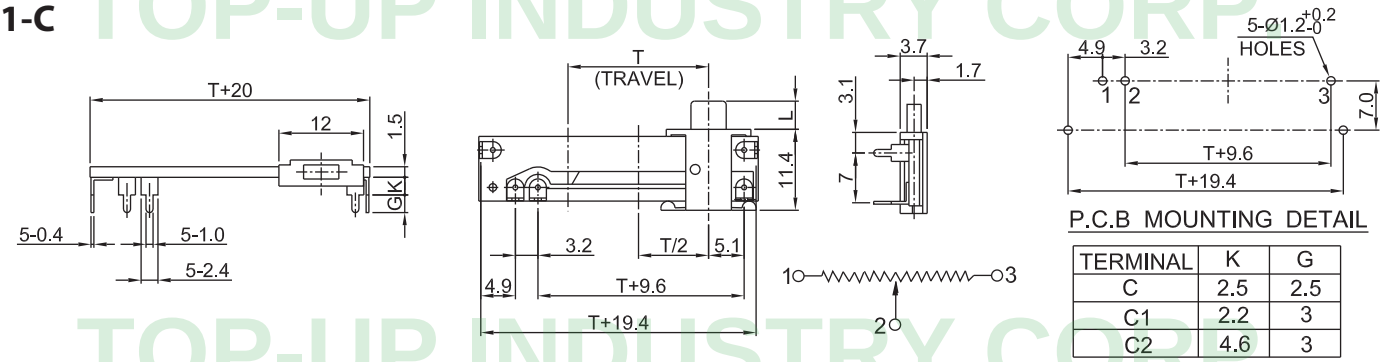

TERMINAL	K	G
C	2.5	2.5
C1	2.2	3
C2	4.6	3

TJZ2-C

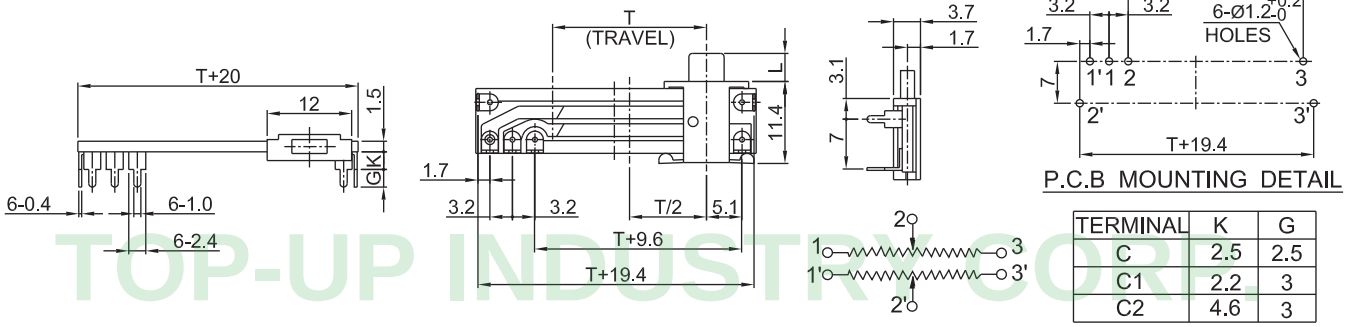

TERMINAL	K	G
C	2.5	2.5
C1	2.2	3
C2	4.6	3

The drawing and specification are for reference only. For further detail, please contact Top-Up head office.

TJZ2-B	TJW1-B	TJW1-C

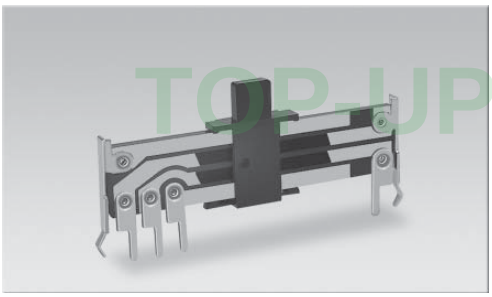

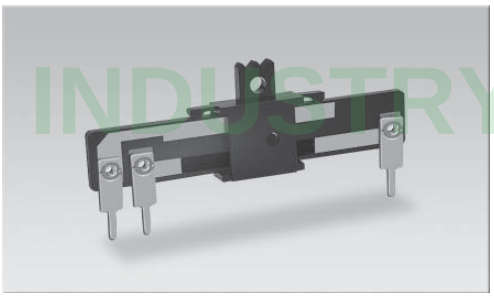

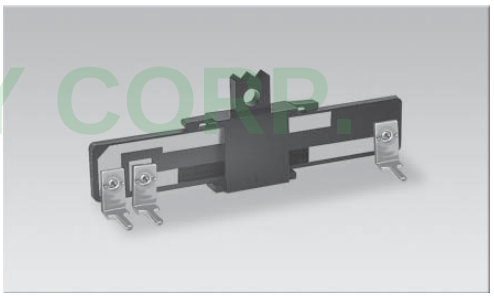

Outline Drawing | Features individual specifications

TJZ2-B

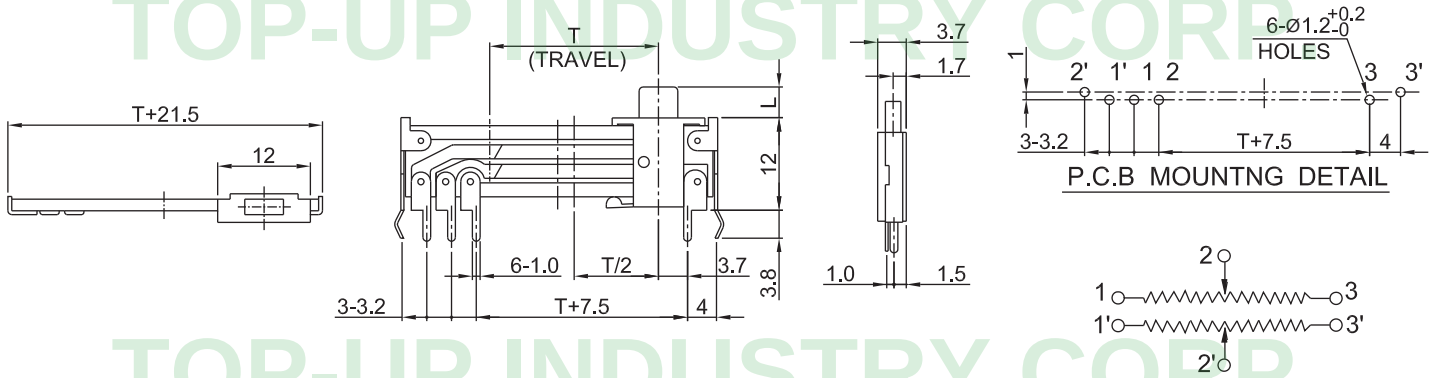

TJW1-B

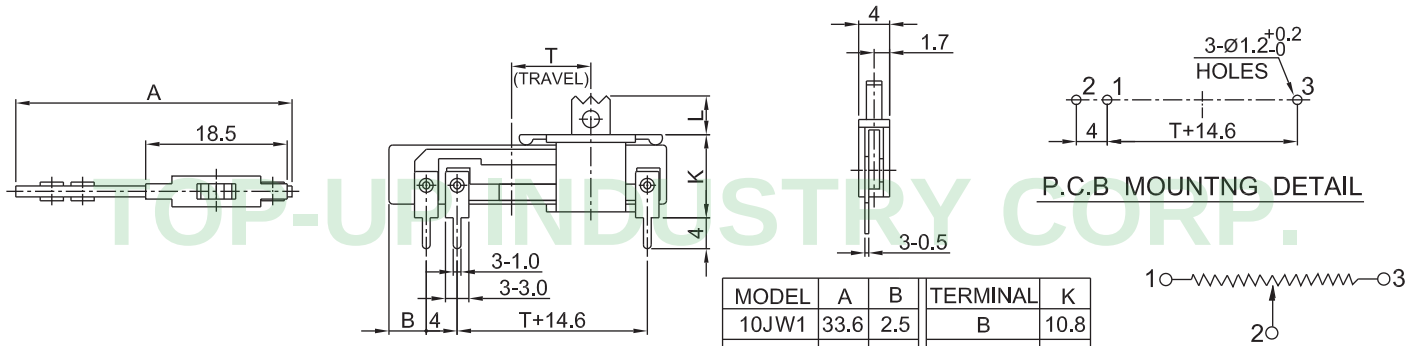

MODEL	A	B	TERMINAL	K
10JW1	33.6	2.5	B	10.8
20JW1	48	3.2	B1	11.8

TJW1-C

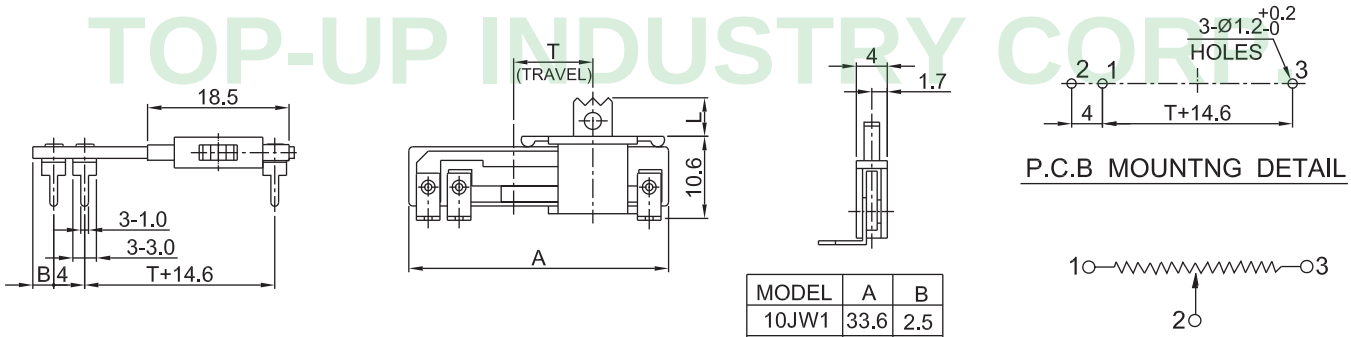

MODEL	A	B
10JW1	33.6	2.5
20JW1	48	3.2

TOP-UP INDUSTRY CORP.

AS Series Code Explanation

T	AS	1	-	B	-	J	W	14.5	-	B	10K	-	1C-	□□□
1	2	3		4		5	6	7		8	9		10	11

1. T —Travel of Sliding (15mm, 20mm, 25mm are available)
2. Product Lines of AS
   Without Case Type Slide Potentiometers : AS Series
3. Number of Unit
   1 — Single Unit
   2 — Dual Unit

(Drawing 1)

P.C.B type

Single Unit

AS1-B

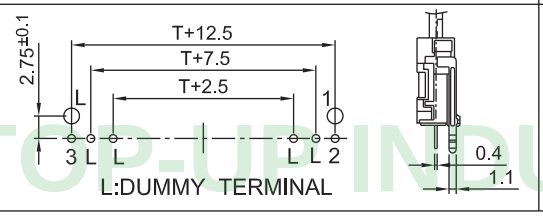

AS1-C

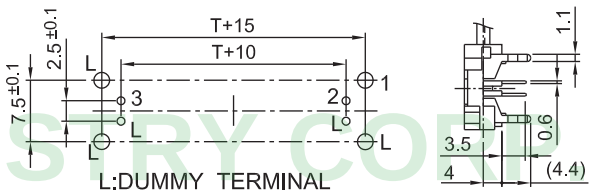

Dual Unit

AS2-B

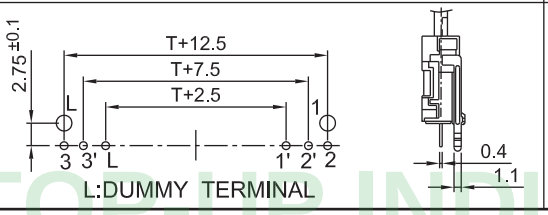

AS2-C

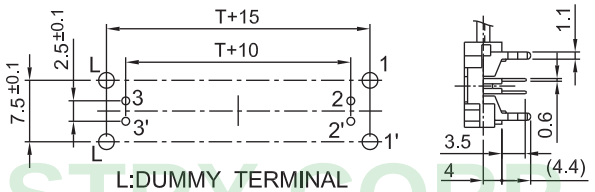

4. Type of Terminal (See Drawing 1)
5. Type of Lever — Insulated Lever Type (Drawing 2)

Lever-Type		G		C		J	
Dimensions	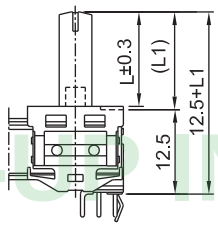	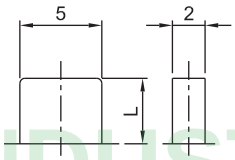		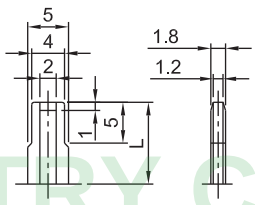		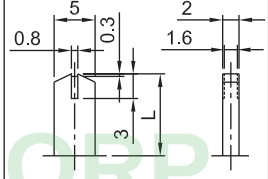	
Length(L)		4.5	9.5	9.5	14.5	9.5	14.5
Length(L1)		5	10	10	15	10	15

6. Indicator Color of Lever Type "J": R-Red, G-Green, O-Orange, W-White Color are Available
7. Lever Dimensions (See Drawing: Insulated Lever Type)
8. Type of Taper (See Taper Chart Page 220)
9. Resistance Value
10. Number of Clicks: Blank - None, 1C- Center Click
11. Serial No.

The drawing and specification are for reference only. For further detail, please contact Top-Up head office.

TAS1-B	TAS1-C	TAS2-B	TAS2-C

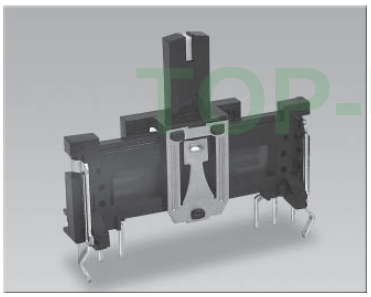
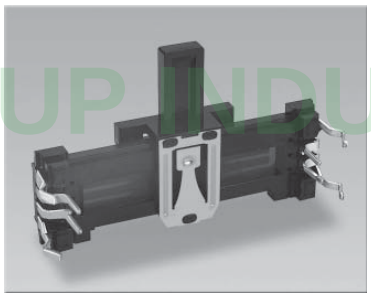
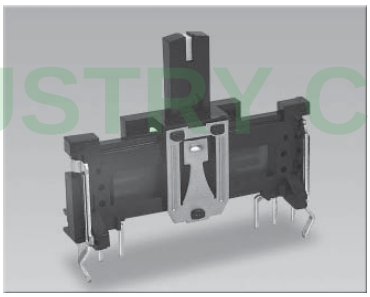
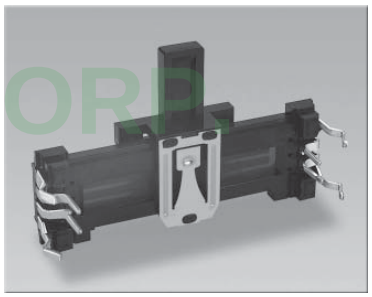

Outline Drawing | Features individual specifications

TAS1-B

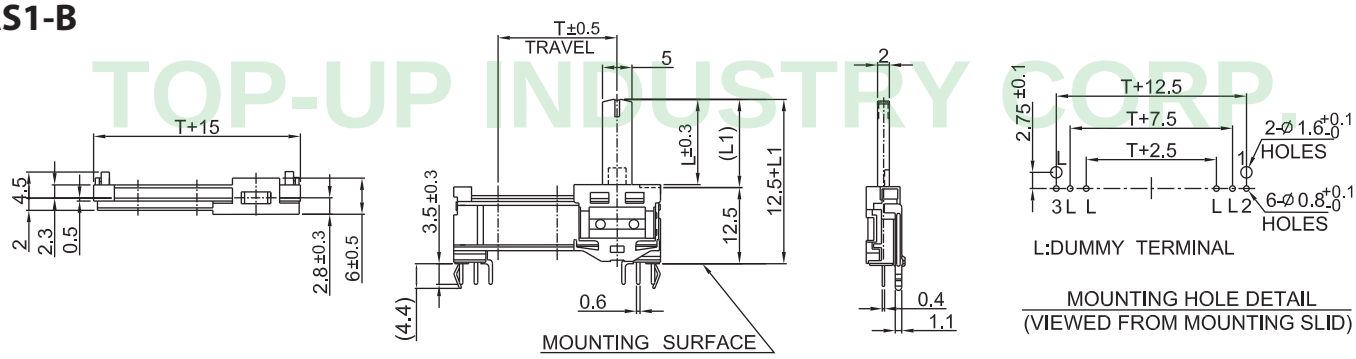

TAS1-C

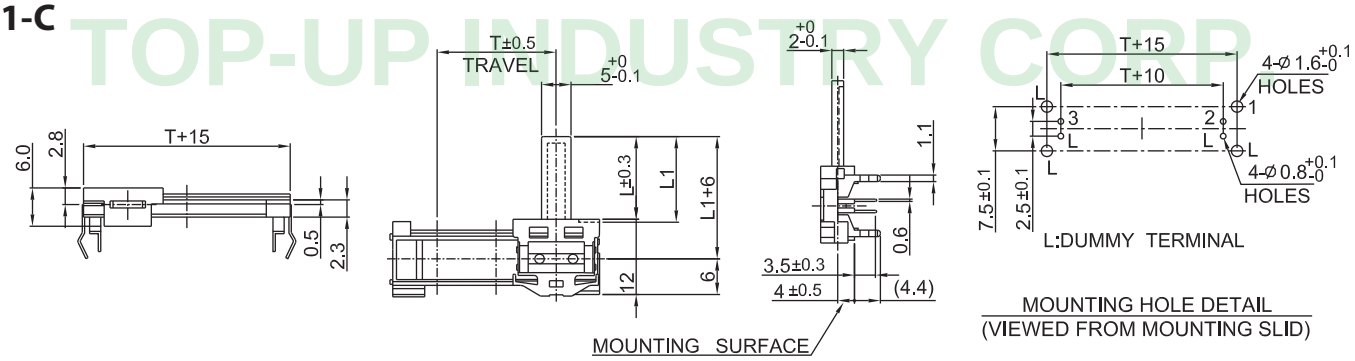

TAS2-B

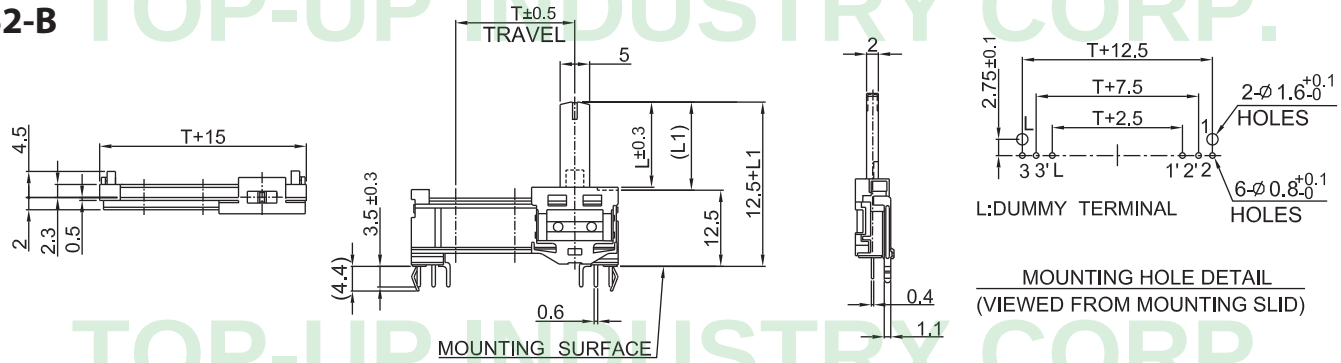

TAS2-C

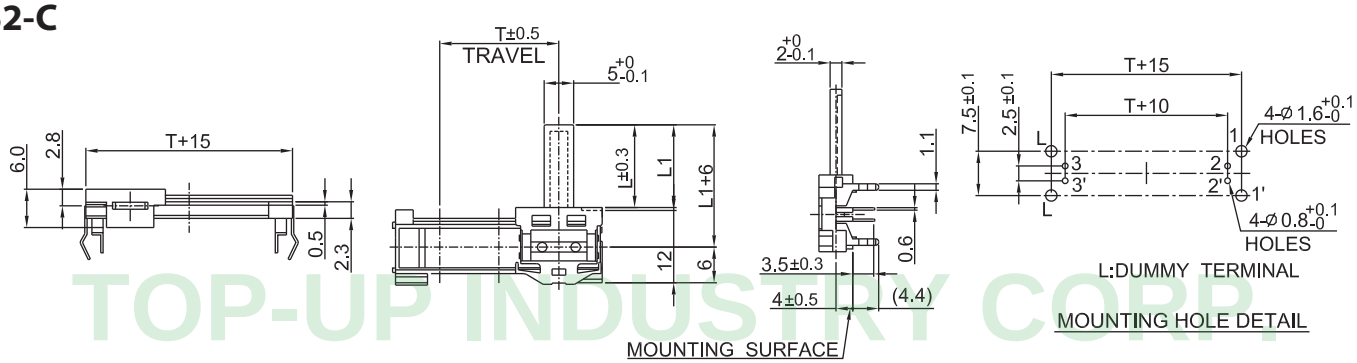

TOP-UP INDUSTRY CORP.

20AS2-B	30AS2-B
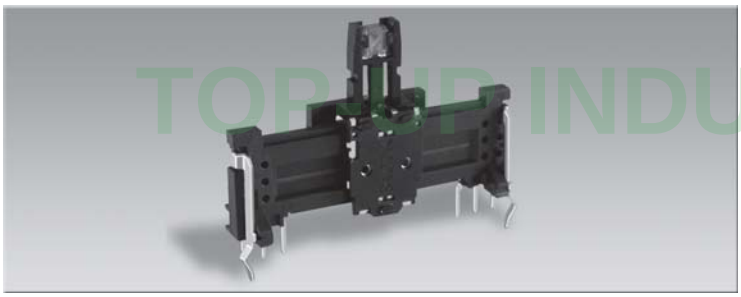	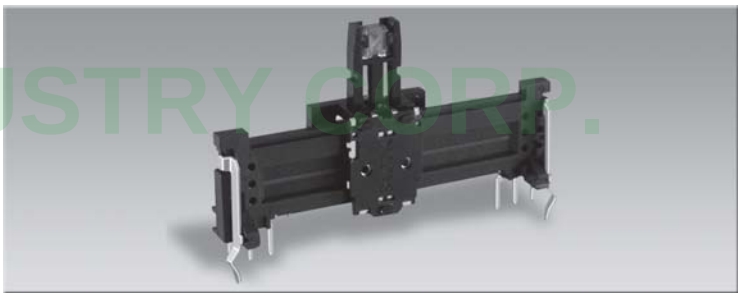
Outline Drawing	Features individual specifications

20AS2-B

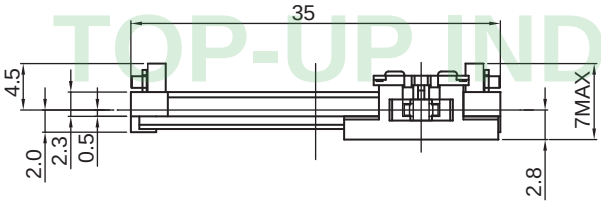

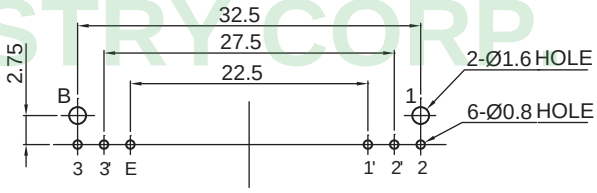

MOUNTING HOLE DETAIL

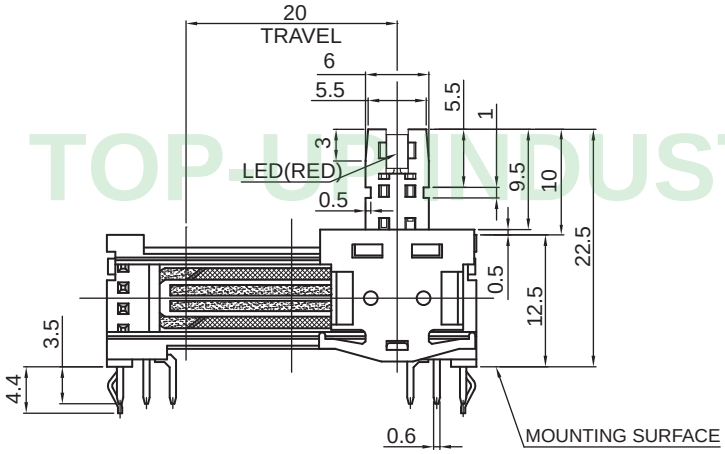

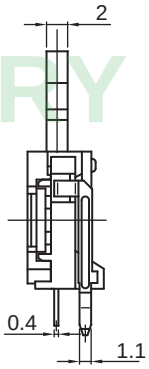

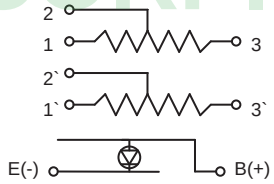

CIRCUIT

30AS2-B

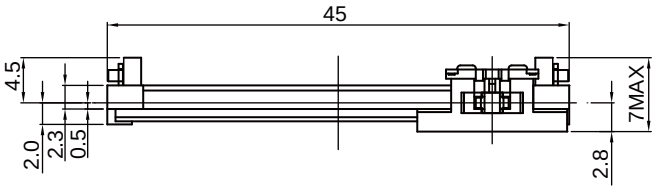

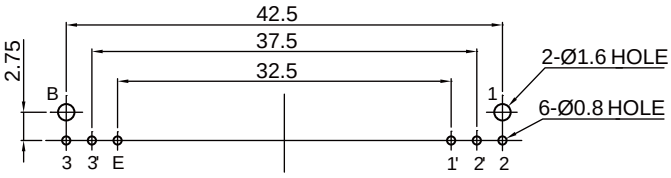

MOUNTING HOLE DETAIL

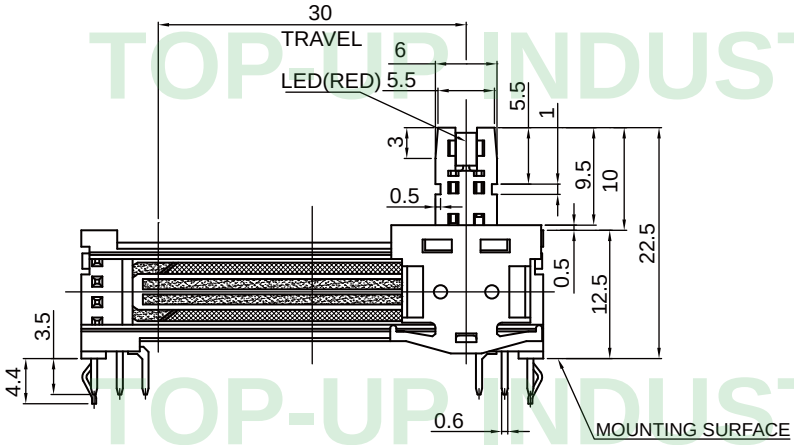

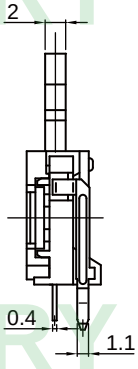

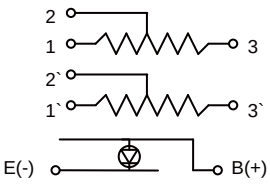

CIRCUIT

The drawing and specification are for reference only. For further detail, please contact Top-Up head office.

TE, TQ, TX, TU Series Code Explanation

10	TE	1	F	-	B	-	H1	P	5	-	A	10K	-	1C	-	□□□
1	2	3	4		5		6	7	8		9	10		11		12

1. Travel of Sliding
2. Product Lines
   With Case Type Slide Potentiometers : TE Series; TQ Series; TX Series; TU Series
3. Number of Unit
   1 — Single Unit
   2 — Dual Unit
4. Type of Metal case " F " - Case With Supporting Foot
5. Type of Terminal
   B — P.C.B Type Terminal
6. Type of Slide Lever

Insulated Lever Type													
Model	20TX1		10TE1F			10TE2F		5TQ1					
Lever -Type	H		H1			C		C2			E		
Dimensions	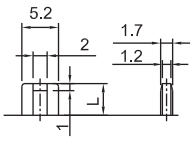		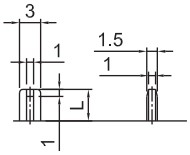			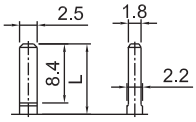		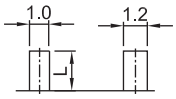			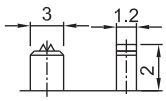		
Length(L)	4.5		4.5	5	10	10		2.2	2.3	2.4	2.0		

Metal Lever Type												
Model	TU Series											
Lever -Type	CH1						C1					
Dimensions	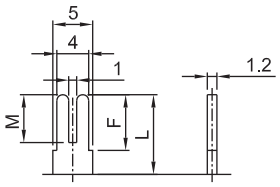						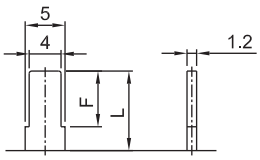					
	L	10	12	15	20	25	L	10	15	20	25	
	F	7	10	10	10	10	F	7	10	10	10	
	M	6	7	7	7	7						

(Drawing 1)

7. Lever Material : P -Insulated Lever ; M - Metal Lever
8. Lever Length (See Drawing 1)
9. Type of Taper (See Taper Chart Page 220)
10. Resistance Value
11. Number of Clicks: Blank - None, 1C- Center Click
12. Serial No.

TOP-UP INDUSTRY CORP.

STANDARD TYPE SLIDE POTENTIONMETERS (TE , TQ SERIES)

TE Series:

Electrical Characteristics:

Total resistance			5KΩ ~2MΩ	
Total resistance tolerance			±20%(more than 1M Ω ±30%)	
Resistance taper			A, B, C	
Insulation resistance			50MΩ min. at 100V DC.	
Withstand voltage			AC 250V (1 minute)	
Rated power	Taper \ Travel		20mm	10mm
	B	Single	0.1	0.03
		Dual	——	0.015
	Except B	Single	0.05	0.015
		Dual	——	0.01
Max. operating voltage (AC V)	B		200	100
	Except B		150	50

Residual resistance	Total resistance	10KΩ	50KΩ	100KΩ	200KΩ	500KΩ	1MΩ
	Between terminals 1-2	10Ω	10Ω	10Ω	20Ω	20Ω	20Ω
	Between terminals 2-3	10Ω	10Ω	20Ω	20Ω	50Ω	50Ω

Durability:

Rotational life	15,000 cycles

TQ Series:

Electrical Characteristics:

Total resistance	10KΩ ~1MΩ
Total resistance tolerance	±20%(more than 1MΩ 30%)
Insulation resistance	50MΩ min. at 100V DC.
Withstand voltage	AC 250V (1 minute)

Durability:

Rotational life	5,000 cycles

TOP-UP INDUSTRY CORP.

The drawing and specification are for reference only. For further detail, please contact Top-Up head office.

STANDARD TYPE SLIDE POTENTIONMETERS (TE , TQ SERIES)

Mechanical Characteristics:

Operating force	0.2~2.0N(20~200gf)	
Stopper strength	50N(5kgf) {measuring point=5mm}	
Lever wobble	2(2*L)/20 mm max. (L:Lever length both side)	
Bending moment	25mN.m (250gf.cm)	
Push pull strength	50N (5kgf)	
Lever deviation	0.5 max. (one side)	
Click slip-out force	0.3~2.5N(30~250gf) (only center click)	
Type of click	Number of click	Mode
	Center click	20TU1 30TU1 30TM1 20TU2 30TU2 30TM2
	7-click	20TU1 20TU2 30TU1
	11-click	30TU1 30TU2 30TM1

Electrical Characteristics:

Total resistance	1KΩ ~1MΩ			
Total resistance tolerance	±20%(more than 1MΩ±30%)			
Resistance taper	A, B, C, D, K, W, RD			
Insulation resistance	100MΩ min. at 250V DC.			
Gang error	-40~0 dB≦3dB			
Rated power	Taper	Travel	20mm	30mm
	B	Single	0.1	0.2
		Dual	0.05	0.1
	Except B	Single	0.05	0.1
		Dual	0.025	0.05
Max. operating voltage (AC V)	B	Single	200	200
		Dual	100	200
	Except B	Single	150	150
		Dual	50	150

Residual resistance	Total resistance	10KΩ	50KΩ	100KΩ	200KΩ	500KΩ	1MΩ
	Between terminals 1-2	10Ω	10Ω	10Ω	20Ω	20Ω	20Ω
	Between terminals 2-3	10Ω	10Ω	20Ω	20Ω	50Ω	50Ω

Durabitity:

Sliding life	15,000 cycles

TOP-UP INDUSTRY CORP.

4TQG1	5TQ1	4TQ1-B	10TQ1

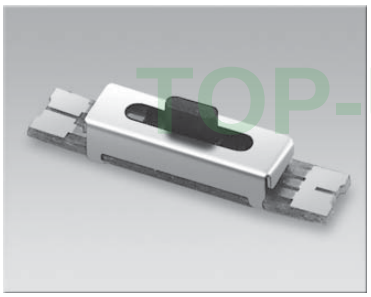
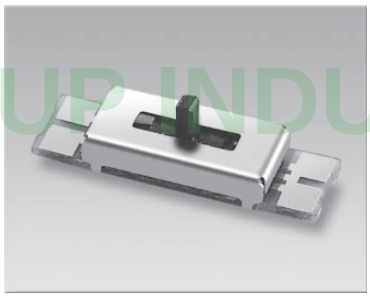
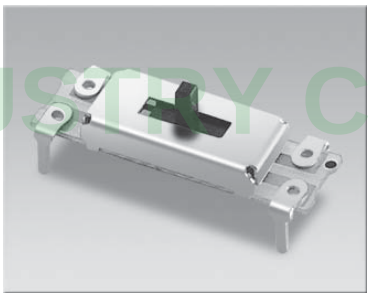
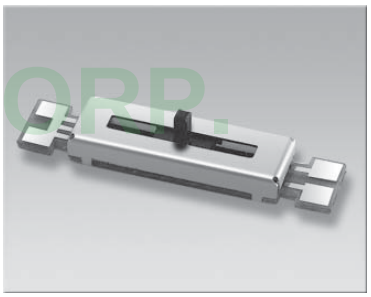

Outline Drawing | Features individual specifications

4TQG1

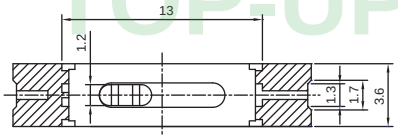

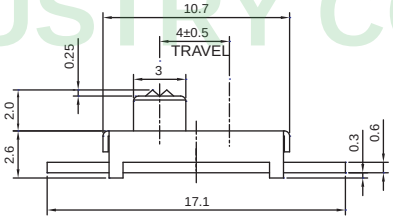

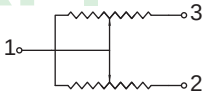

5TQ1

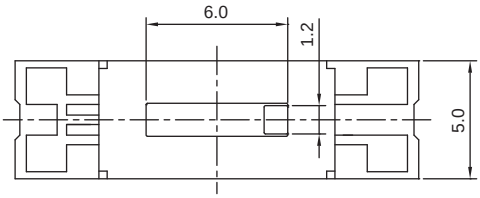

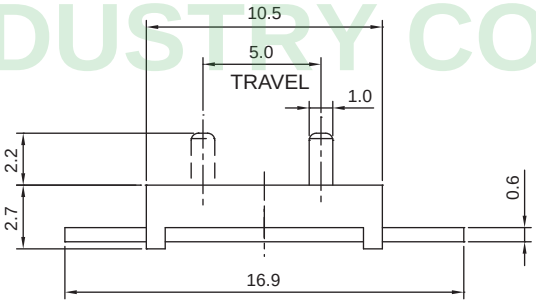

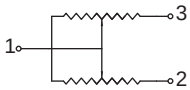

4TQ1-B

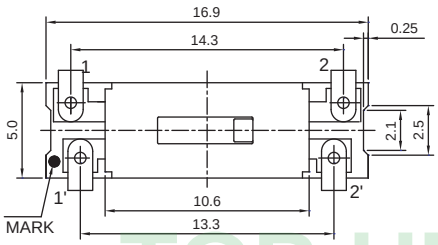

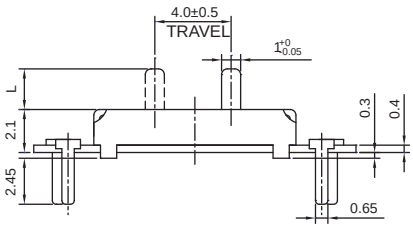

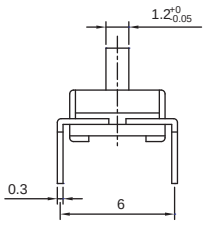

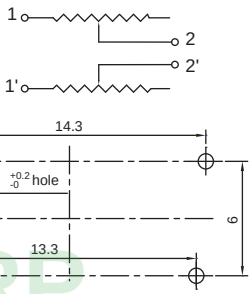

10TQ1

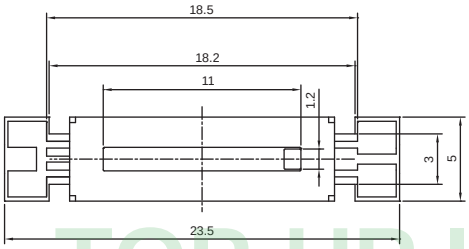

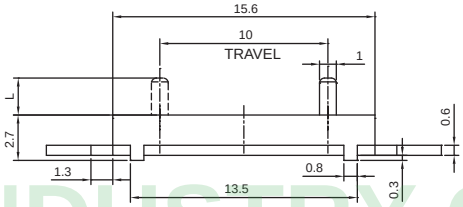

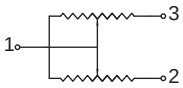

L	1.2	2.2

TOP-UP INDUSTRY CORP.

The drawing and specification are for reference only. For further detail, please contact Top-Up head office.

10TE1F-B	10TE2F-B	10TE2F-BN	10TE2F-B-L□

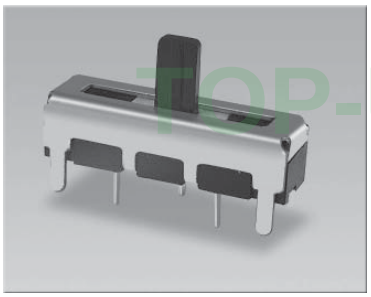
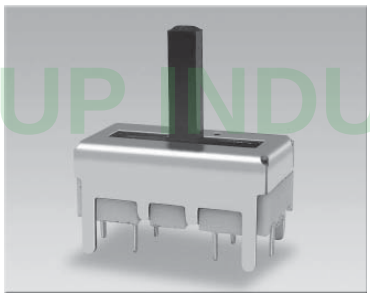
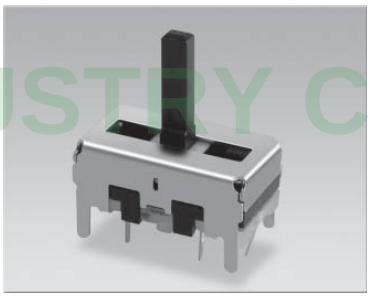

Outline Drawing | Features individual specifications

10TE1F-B

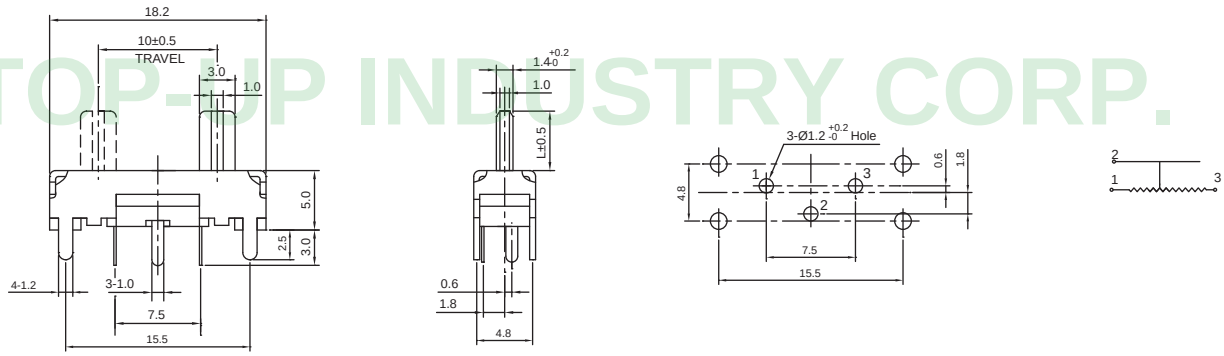

10TE2F-B

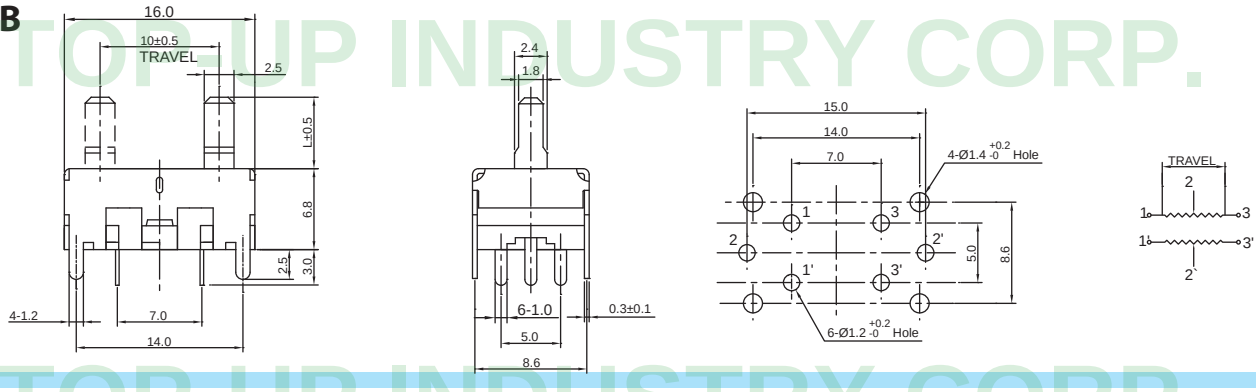

10TE2F-BN

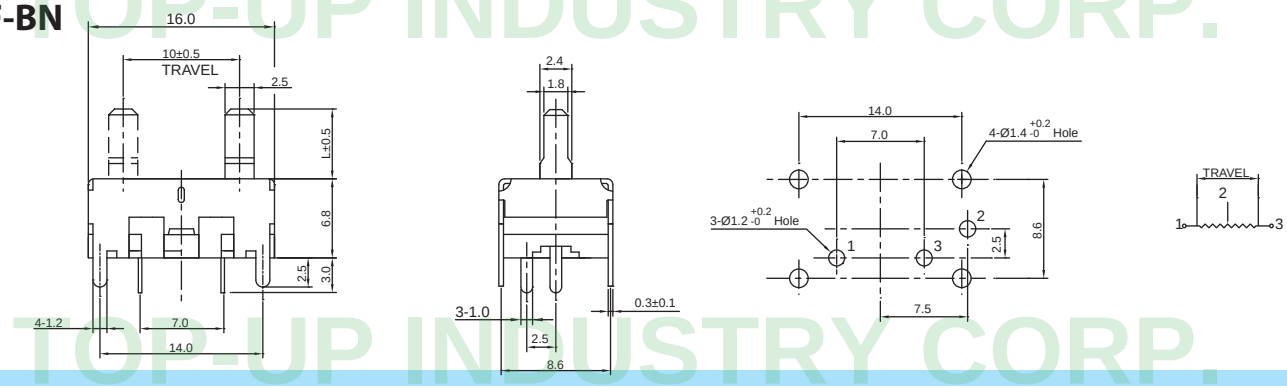

10TE2F-B-L□

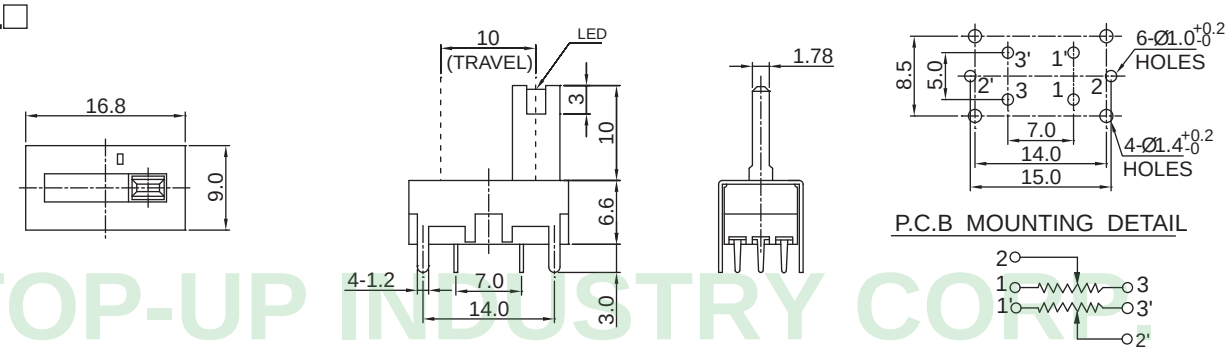

TOP-UP INDUSTRY CORP.

20TU1F-B	30TU1F-B	20TU2F-B	30TU2F-B

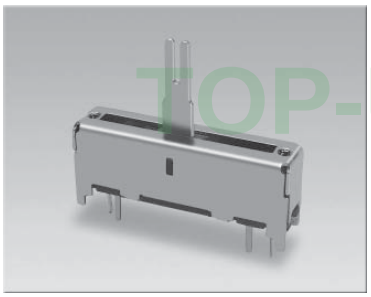
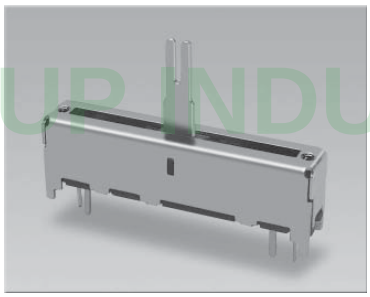
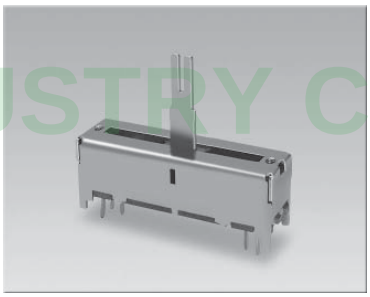
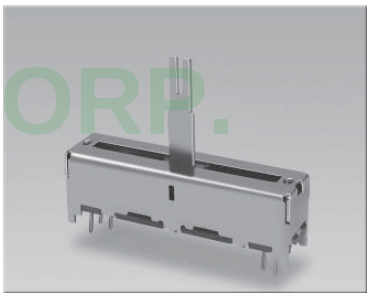

Outline Drawing | Features individual specifications

20TU1F-B

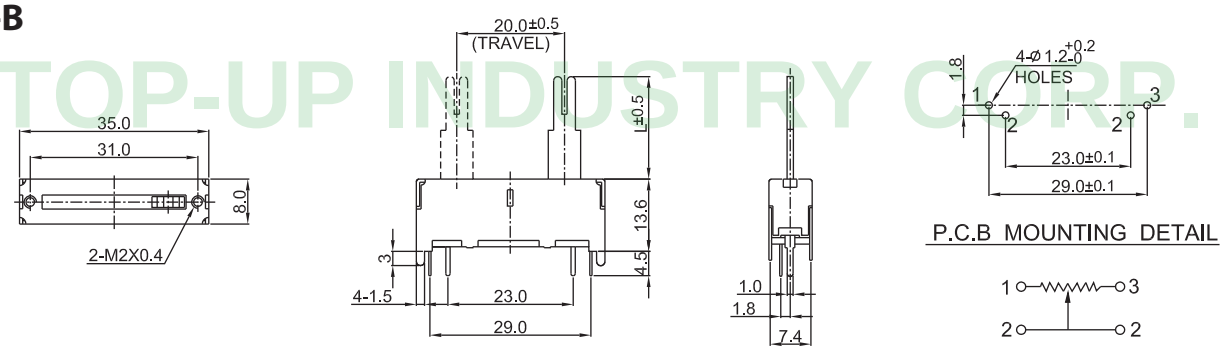

30TU1F-B

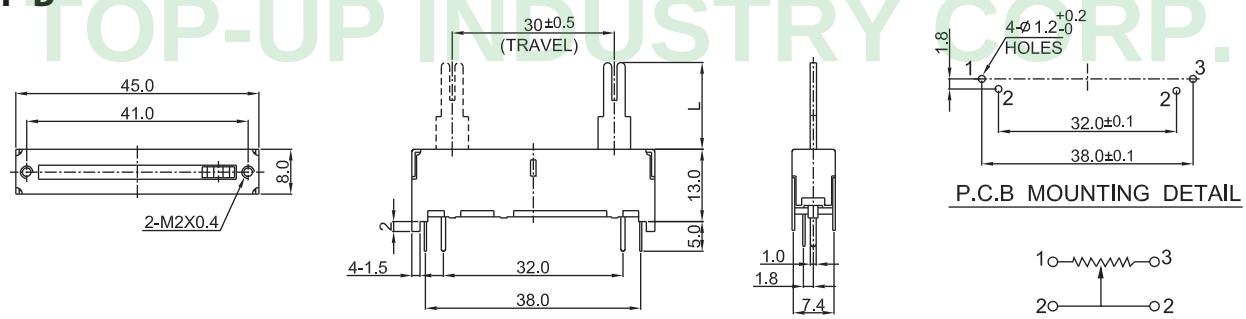

20TU2F-B

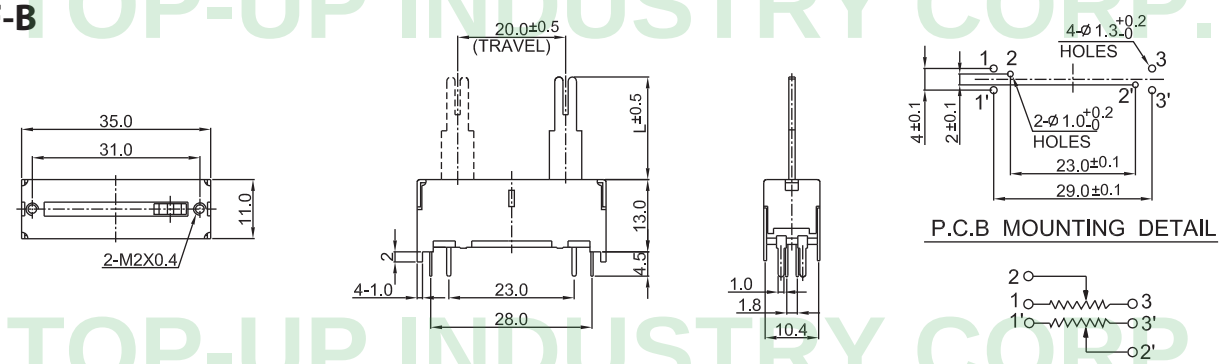

30TU2F-B

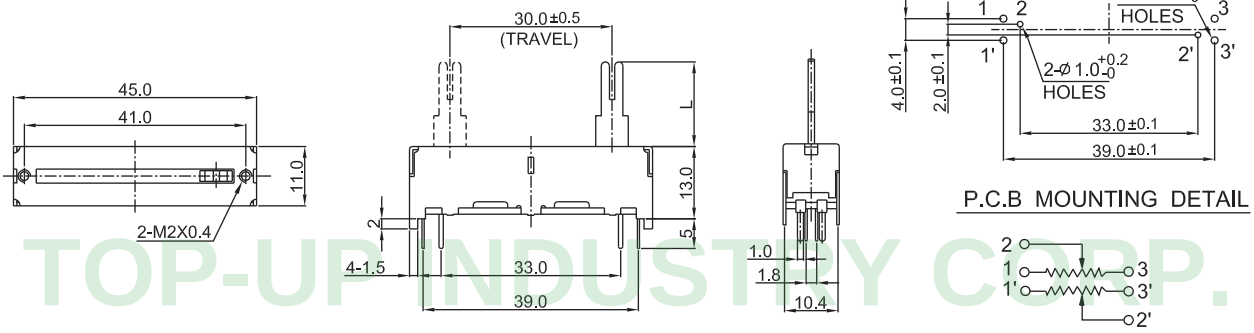

The drawing and specification are for reference only. For further detail, please contact Top-Up head office.

LA Series Code Explanation

T	LA	1	B	-	B	-	J	W	P	15	-	A	10K	-	DC	-	□□□
1	2	3	4		5		6	7	8	9		10	11		12		13

1. T — Travel of Sliding (20, 30, 45, 60mm are available)
2. Product Lines of LA (With Case Type Slide Potentiometers)

LA Series	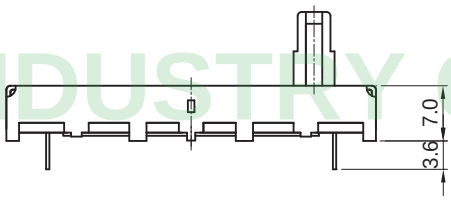

3. Number of Unit : 1 - Single Unit
4. Snap-in Frame : Blank - Without Frame ; B - With Frame
5. Type of Terminal : B - P.C.B Type
6. Type of Slide Lever (Drawing 1)

Lever -Type	J (Insulated Lever)			A (Insulated Lever)			C (Insulated Lever)			
Dimensions	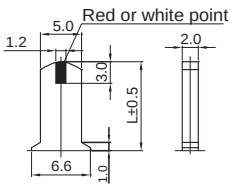			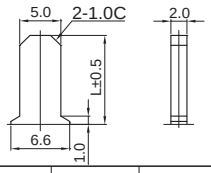			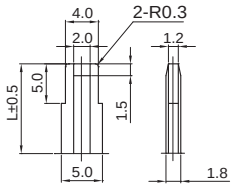			
Length (L)	10	15	20	5	15		10	15		
Lever -Type	C1 (Metal Lever)			CH1 (Metal Lever)			D1 (Metal Lever)			B1 (Metal Lever)
Dimensions	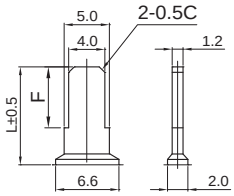			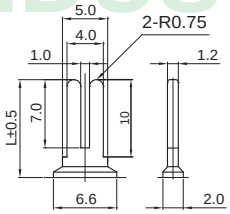			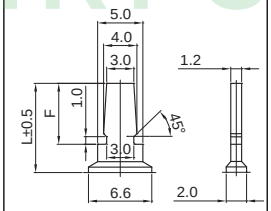			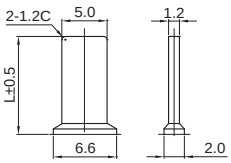
Length(L)	L 10 15 20 25 17.3			L 10.4			L 10 15 20			L 10 15
	F 7 10 10 10 10						F 7 10 10			

7. Indicator Color of Lever Type " J " : R - Red , G - Green , O - Orange , W - White
8. Lever Material : M - Metal Lever ; P - Insulated Lever
9. Lever Dimensions (See Drawing 1)
10. Type of Taper (See Taper Chart Page 220)
11. Resistance Value
12. DC — With Dust Cover
13. Serial No.

TOP-UP INDUSTRY CORP.

20LA1-B	30LA1-B	45LA1-B	60LA1-B

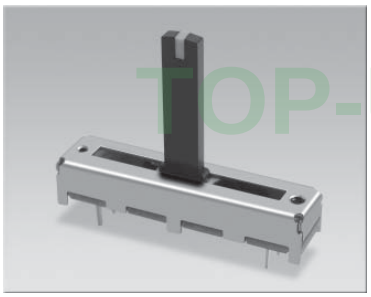
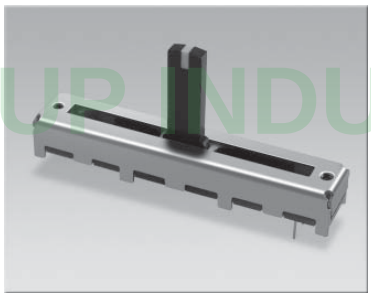
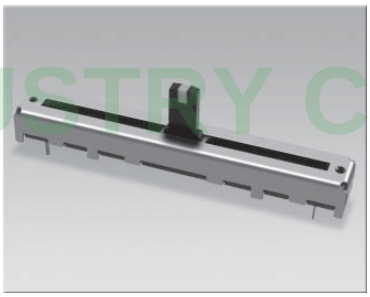
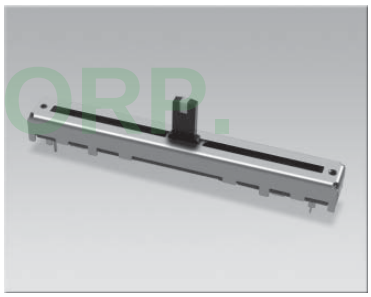

Outline Drawing | Features individual specifications

20LA1-B

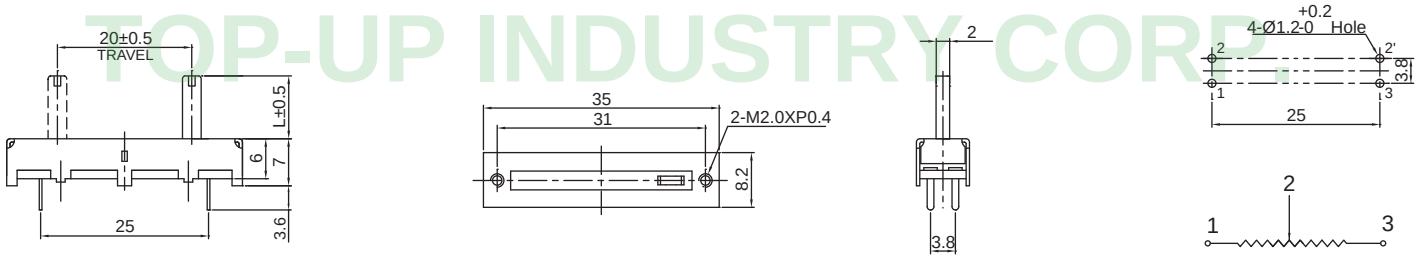

30LA1-B

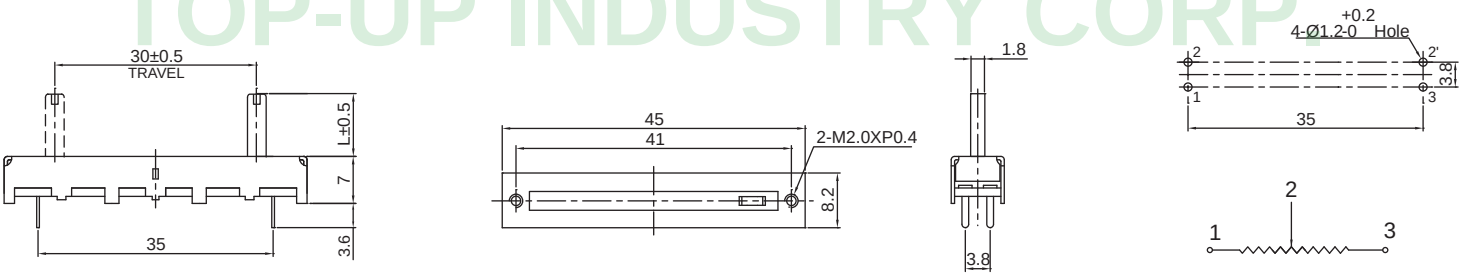

45LA1-B

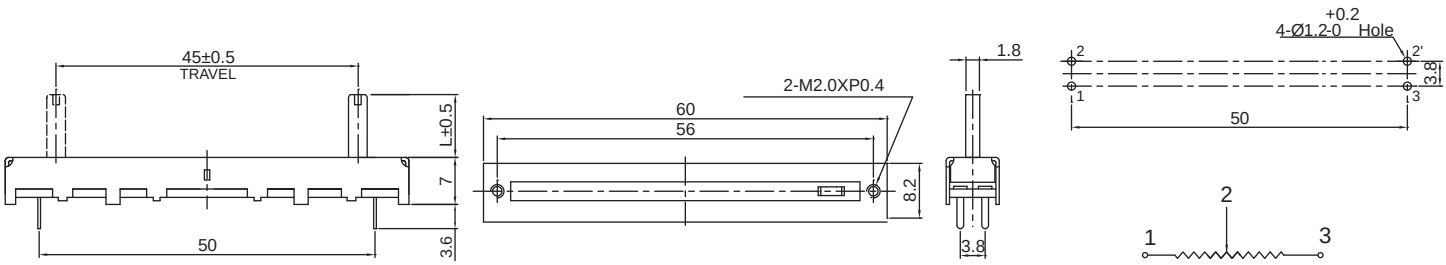

60LA1-B

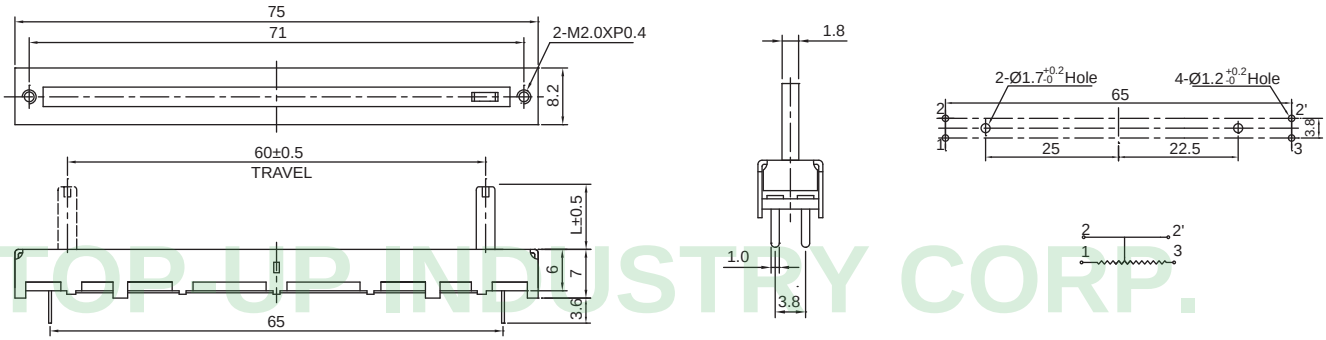

The drawing and specification are for reference only. For further detail, please contact Top-Up head office.

20LA1B-B	30LA1B-B	45LA1B-B	60LA1B-B

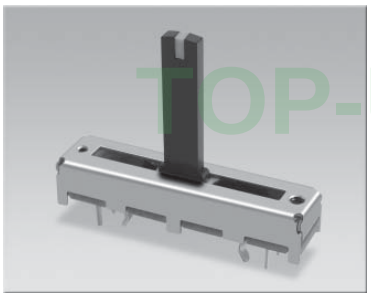
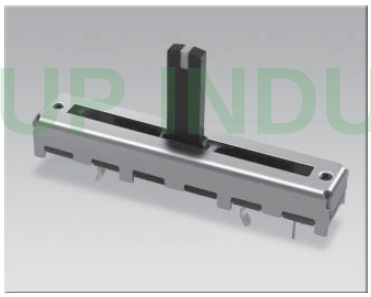
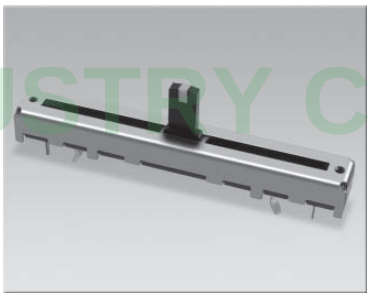
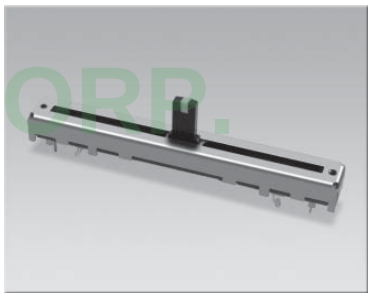

Outline Drawing | Features individual specifications

20LA1B-B

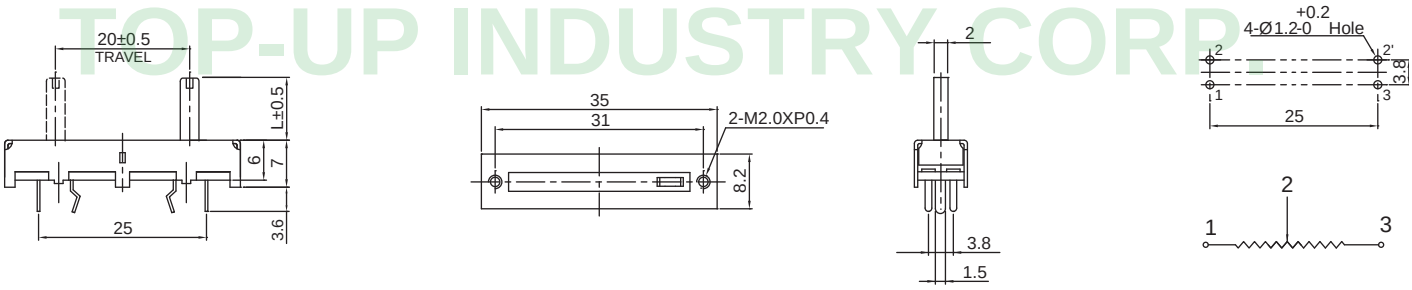

30LA1B-B

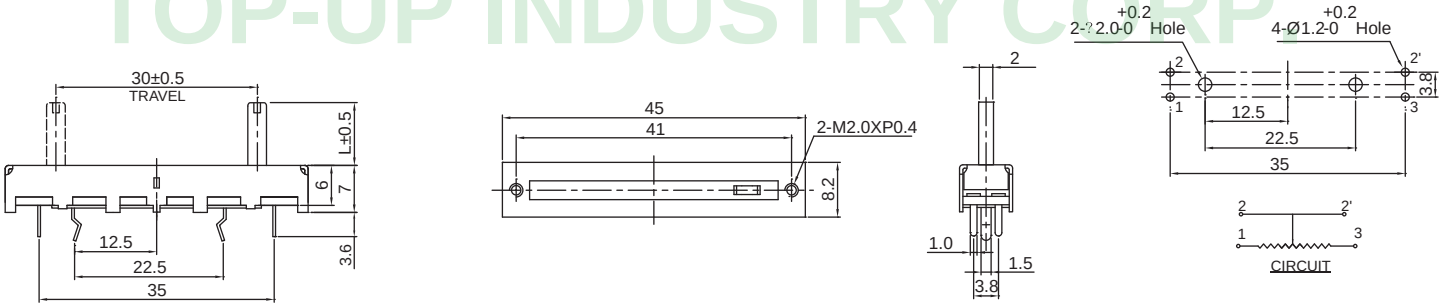

45LA1B-B

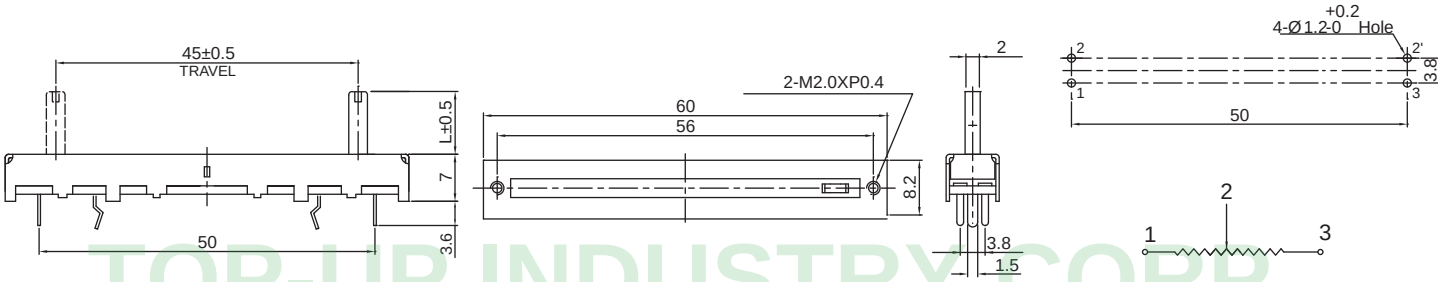

60LA1B-B

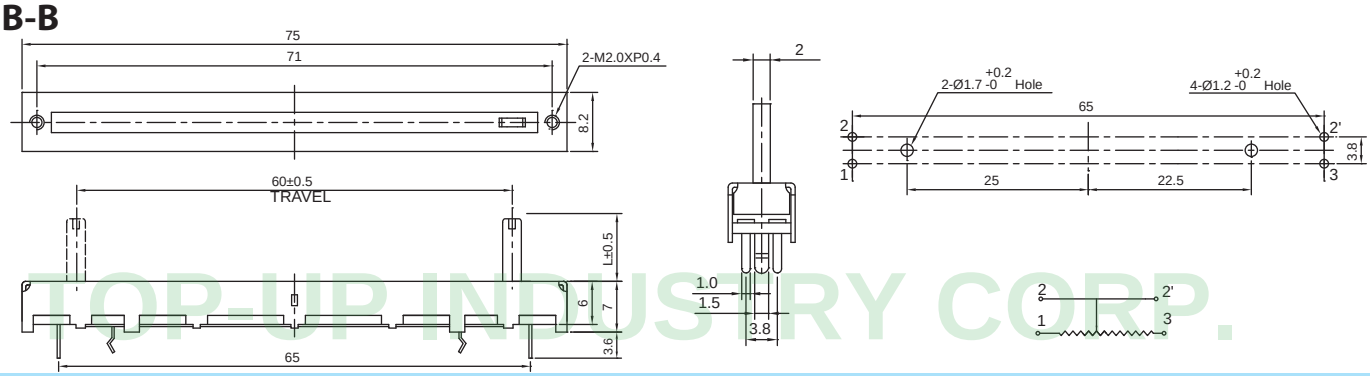

TOP-UP INDUSTRY CORP.

TM Series Code Explanation

30	TM	A	1	-	B	-	CH2	M	10	-	A	10K	-	1C	-	□□□
1	2	3	4		5		6	7	8		9	10		11		12

Remark:

1. Travel of Sliding
2. Product Lines of TM Series
   With Case Type Slide Potentiometers
3. Option: Based On Terminal Position
   (TMA Series, TMB Series, TMC Series , TMK Series)

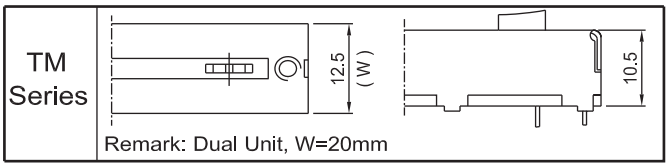

(Drawing 1)

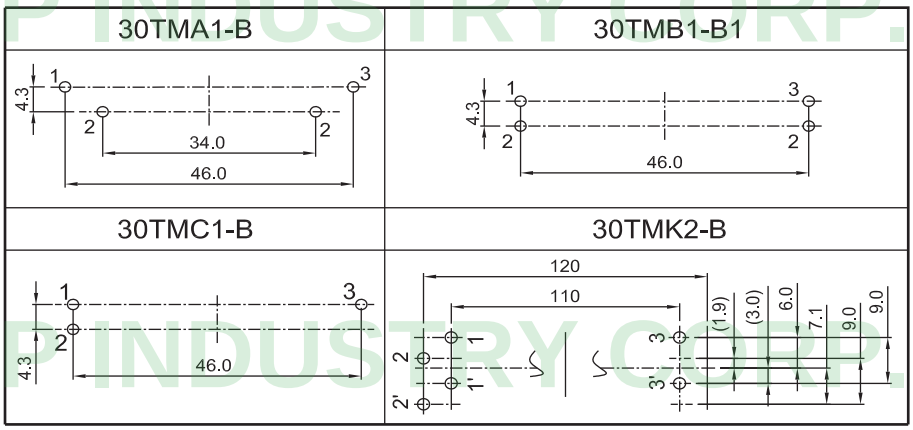

4. Number of Unit
   1 — Single Unit
   2 — Dual Unit
5. Type of Terminal

(Drawing 2)

Terminal -Type	P.C.B Type		Solder Lug Type
	B	B1	A
Dimensions	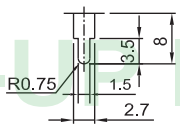	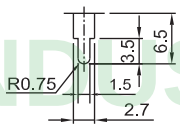	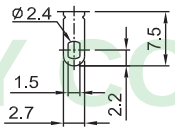

6. Type of Slide Lever

Metal Type

Lever -Type	CH2					C3				
Dimensions	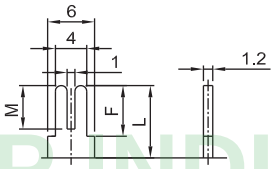					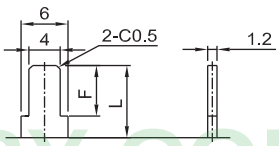				
	L	10	12	15	20	25	L	10	15	20	25
	F	7	10	10	10	10	F	7	10	10	10
	M	6	7	7	7	7					

7. Lever Material (M -Metal Lever)

(Drawing 3)

8. Lever Length (See Drawing 3)
9. Type of Taper (See Taper Chart Page 220)
10. Resistance Value
11. Number of Clicks: Blank- None, 1C-Center Click
12. Serial No.

TOP-UP INDUSTRY CORP.

The drawing and specification are for reference only. For further detail, please contact Top-Up head office.

30TMA1-B	30TMB1-B	30TMC1-B

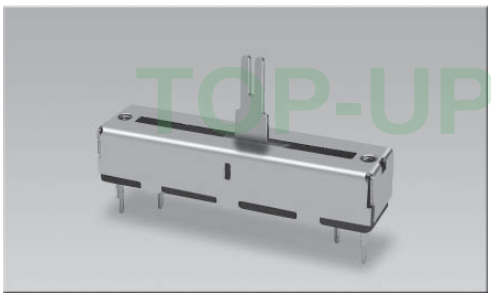
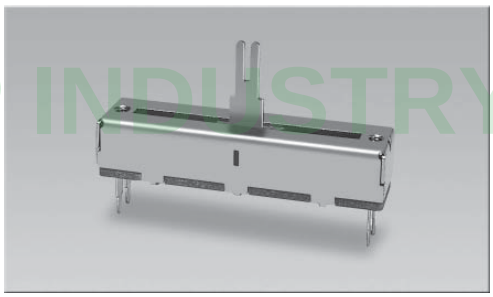
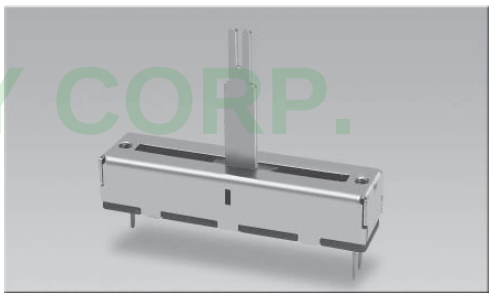

Outline Drawing | Features individual specifications

30TMA1-B

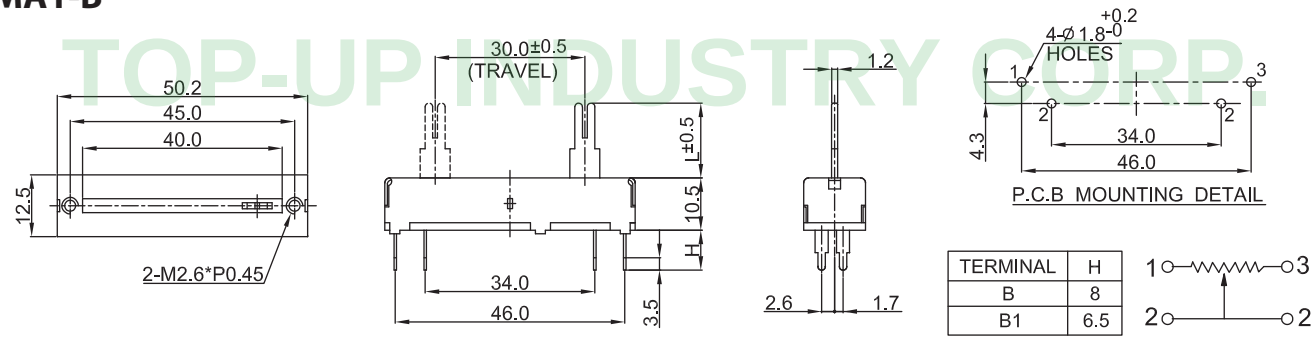

TERMINAL	H
B	8
B1	6.5

30TMB1-B

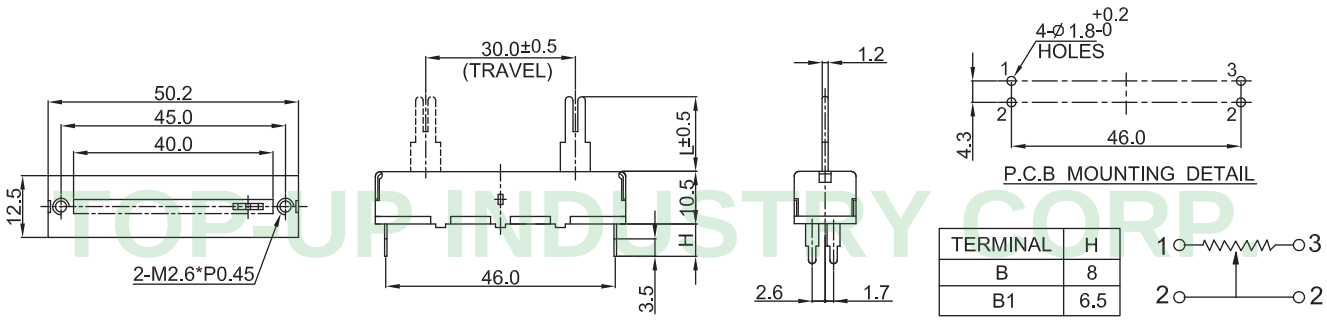

TERMINAL	H
B	8
B1	6.5

30TMC1-B

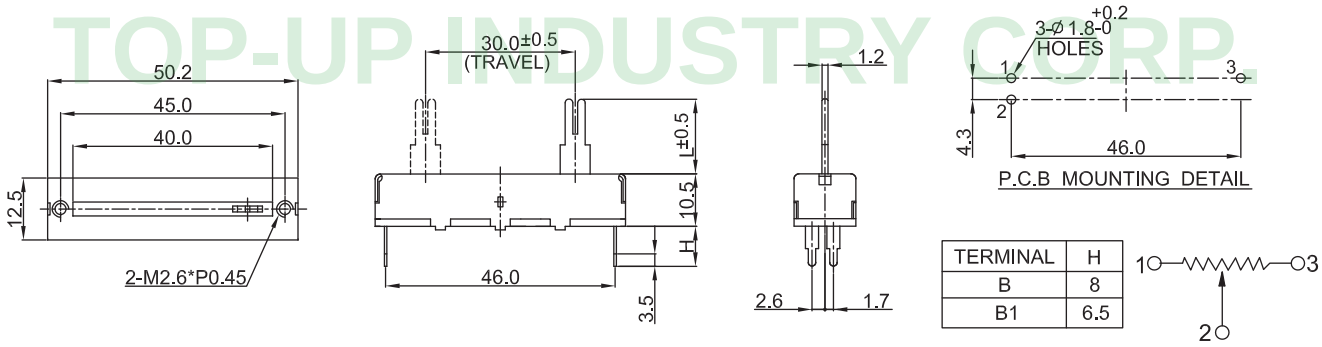

TERMINAL	H
B	8
B1	6.5

TOP-UP INDUSTRY CORP.

TN Series Code Explanation

45	TN	H	1	-	B	-	CH2	M	10	-	A	10K	-	1C	-	□□□
1	2	3	4		5		6	7	8		9	10		11		12

1. Travel of Sliding
2. Product Lines of LN
   With Case Type Slide Potentiometers

TN Series	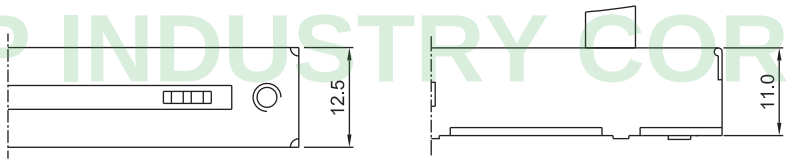

3. Option: Based on Terminal Position
   (TNH Series; TNK Series; TNN Series; TNM Series; TNL Series) (Drawing 1)

45TNH1-B	45(60)TNK1-B	45TNN2-A
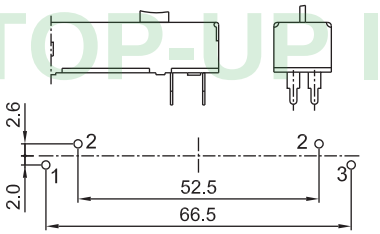	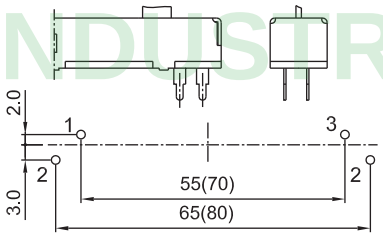	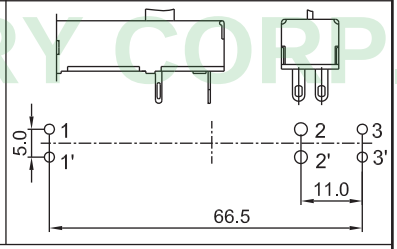

45(60)TNM2-B	60TNL1-B
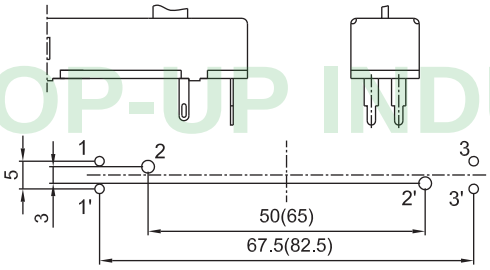	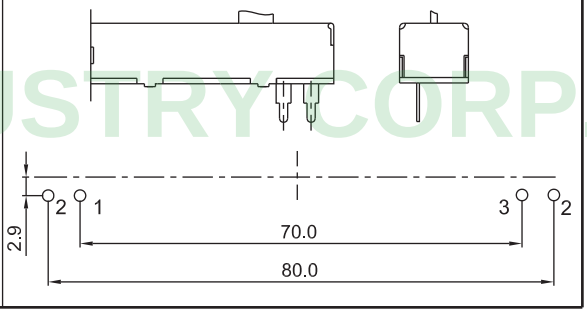

4. Number of Unit
   1 — Single Unit
   2 — Dual Unit
5. Type of Terminal (Drawing 2)

Terminal -Type	P.C.B Type		Solder Lug Type
	B	B1	A
Dimensions	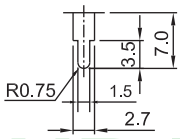	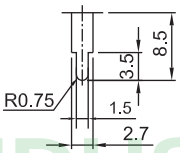	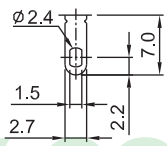

The drawing and specification are for reference only. For further detail, please contact Top-Up head office.

TN Series Code Explanation

45	TN	H	1	-	B	-	CH2	M	10	-	A	10K	-	1C	-	□□□
1	2	3	4		5		6	7	8		9	10		11		12

6. Slide Lever Type

Metal Type

Lever -Type	CH2						C2							C3					
Dimensions	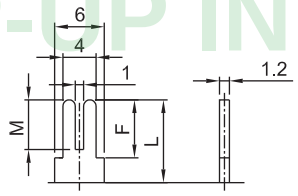						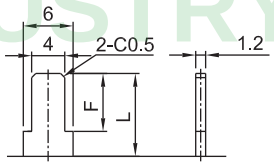							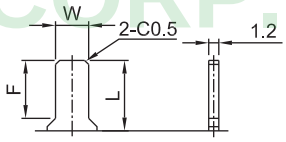					
	L	10	15	20	21	25	L	8.5	10	15	20	25	27	L	8.5	10			
	F	7	10	10	10	10	F	5	5	10	10	10	10	F	7	10			
	M	6	7	7	7	7								W	4	5			

Lever -Type	BH						B2							F4					
Dimensions	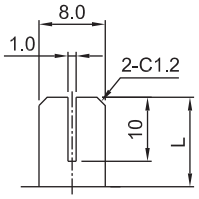						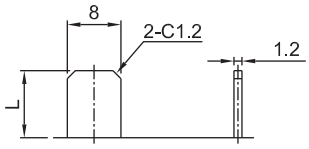							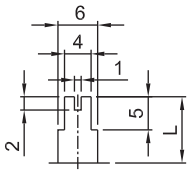					
	L	15	20				L	7	8	10	25			L	10				

Lever -Type	AH						D2					
Dimensions	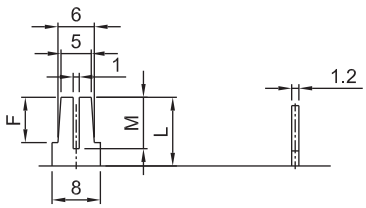						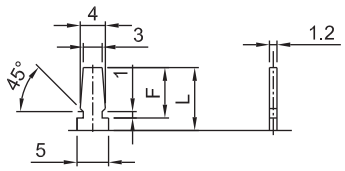					
	L	16	20				L	10	15	20	25	
	F	11	10				F	5	10	10	10	
	M	11	12									

(Drawing 3)

7. Lever Material : (M: Metal Lever)
8. Lever Dimentions (See Drawing 3)
9. Type of Taper (See Taper Chart Page 220)
10. Resistance Value
11. Number of Clicks : Blank-None, 1C- Center Click
12. Serial No.

TOP-UP INDUSTRY CORP.

STANDARD TYPE SLIDE POTENTIOMETERS (TN SERIES)

Electrical Characteristics:

Total resistance		5KΩ ~1MΩ					
Total resistance tolerance		±20%(more than 1M Ω ±30%)					
Rated power (w)		Taper	Travel	45mm	60mm		
		B	Single	0.25	0.5		
			Dual	0.125	0.25		
		Except B	Single	0.125	0.25		
			Dual	0.06	0.125		
Max. operating voltage		B		350	500		
		Except B		250	350		
Residual resistance	Total resistance	10KΩ	50KΩ	100KΩ	200KΩ	500KΩ	1MΩ
	Between terminals 1-2	10Ω	10Ω	10Ω	20Ω	20Ω	20Ω
	Between terminals 2-3	10Ω	10Ω	20Ω	20Ω	50Ω	50Ω
Resistance taper		A,B,C,D,K,W,RD					
Insulation resistance		100MΩ min.at 500V DC					
Gang error		-40~0 dB≦3dB					

Mechanical Characteristics:

Operating force	0.2~2N(20~200gf)
Stopper strength	50N(5kgf) {measuring point=5mm}
Push pull strength	30N(3kgf)
Lever deviation	0.5 max. (one side)
Click slip-out force	0.3~2.5N(30~250gf) (only center click)

Durabitity:

Sliding life	15,000 cycles

TOP-UP INDUSTRY CORP.

The drawing and specification are for reference only. For further detail, please contact Top-Up head office.

45TNH1-B	45TNK1-B	45TNN2-A	45TNM2-B

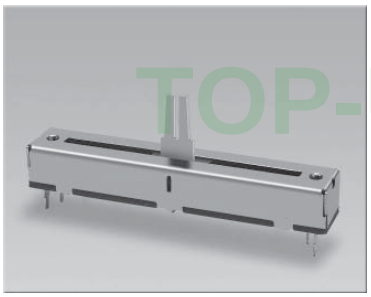
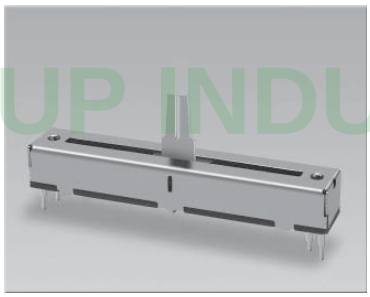
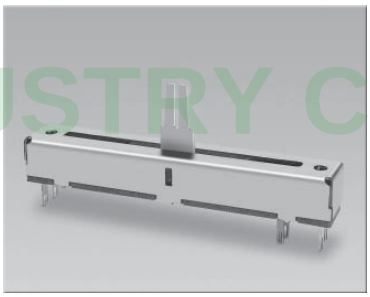
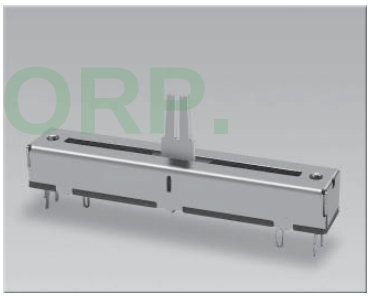

Outline Drawing | Features individual specifications

45TNH1-B

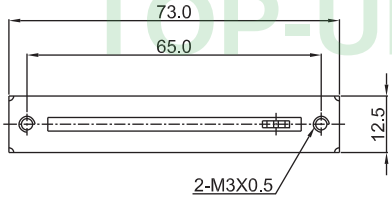

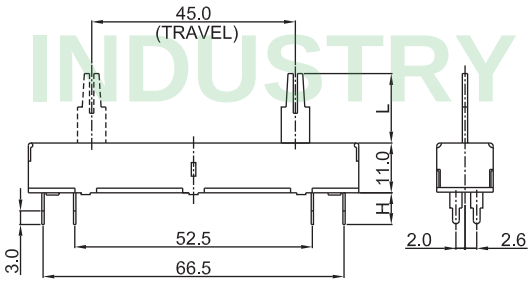

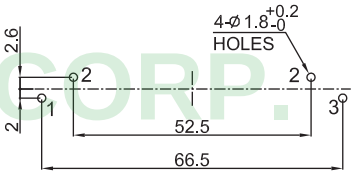

P.C.B MOUNTING DETAIL

TERMINAL	H
B	7.0
B1	8.5

45TNK1-B

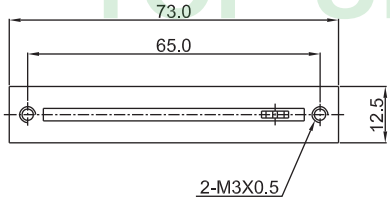

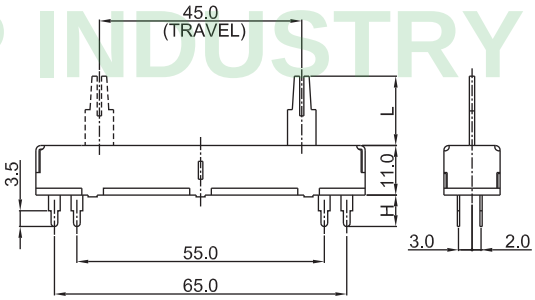

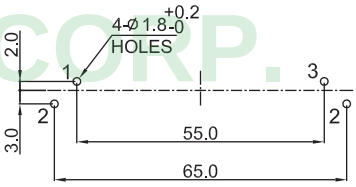

P.C.B MOUNTING DETAIL

TERMINAL	H
B	7.0
B1	8.5

45TNN2-A

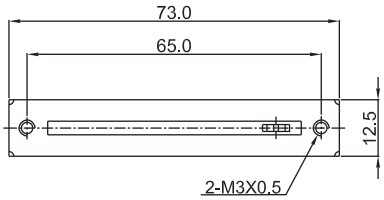

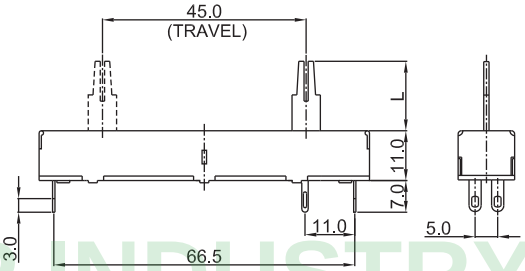

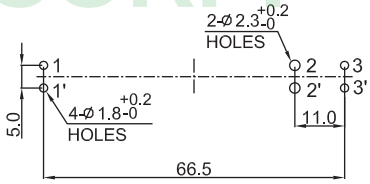

P.C.B MOUNTING DETAIL

45TNM2-B

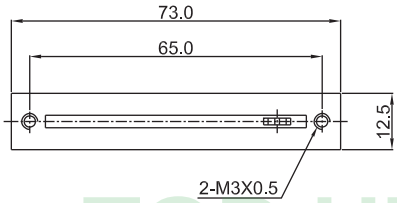

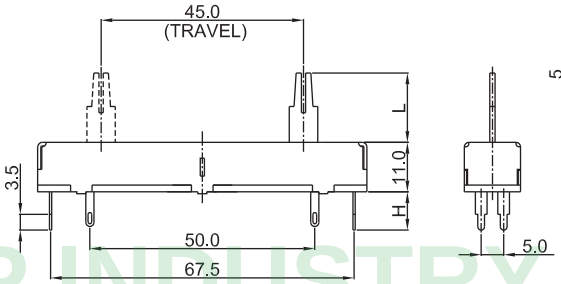

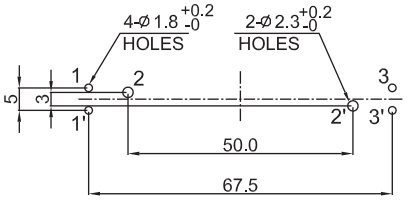

P.C.B MOUNTING DETAIL

TERMINAL	H
B	7.0
B1	8.5

TOP-UP INDUSTRY CORP.

60TNK1-B	60TNM2-B	100TNM2-B

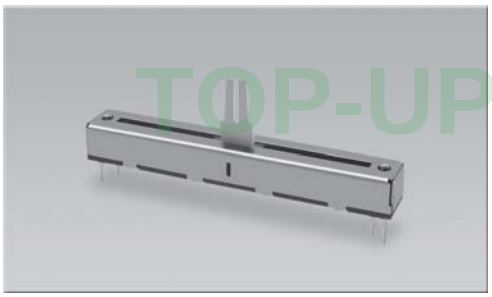
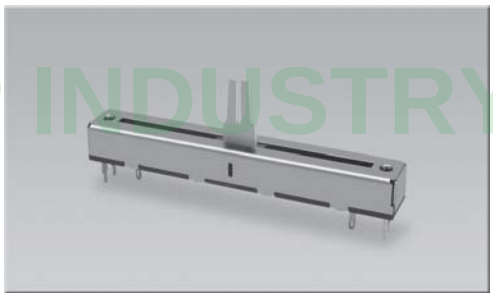
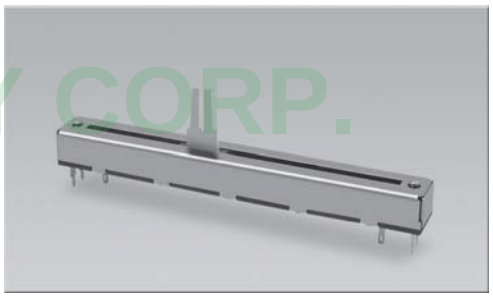

Outline Drawing | Features individual specifications

60TNK1-B

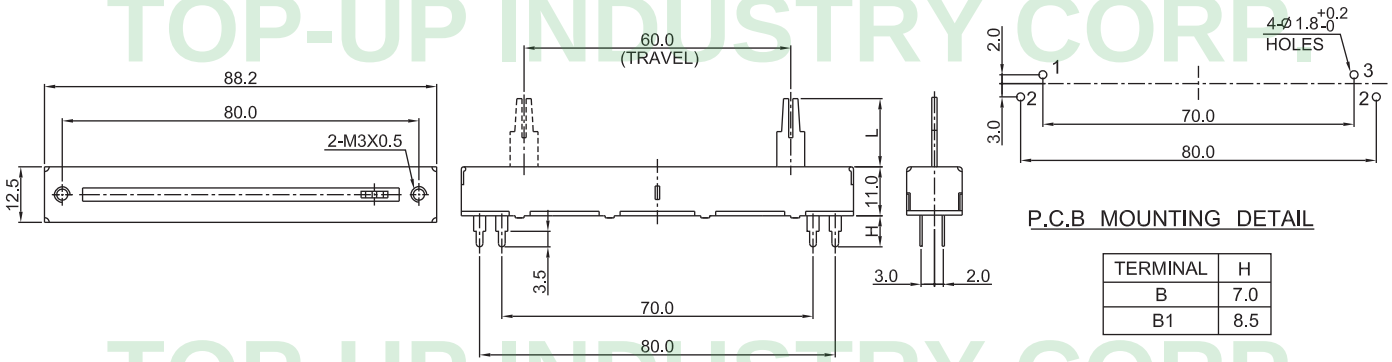

TERMINAL	H
B	7.0
B1	8.5

60TNM2-B

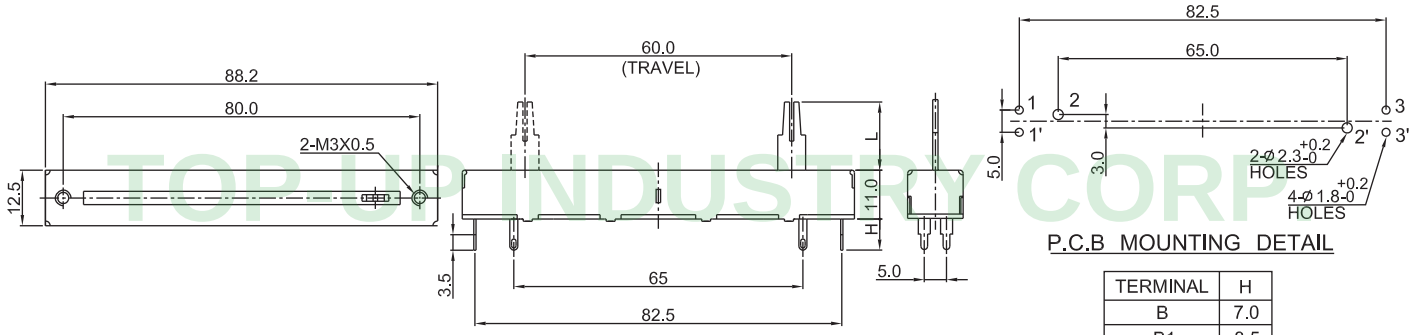

TERMINAL	H
B	7.0
B1	8.5

100TNM2-B

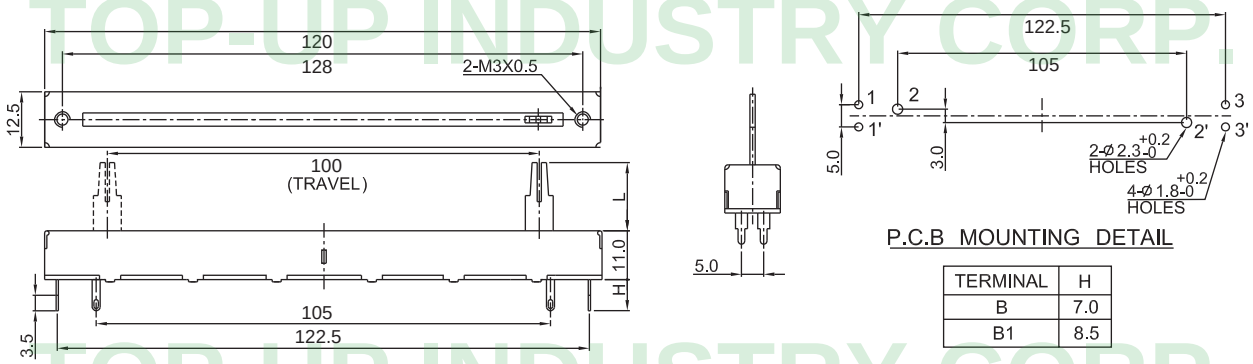

TERMINAL	H
B	7.0
B1	8.5

The drawing and specification are for reference only. For further detail, please contact Top-Up head office.

LP , LD Series Code Explanation

T	LP	1	A	-	B	-	CH1	M	10 .4	-	A	10K	-	1C	-	DC	-	□□□
1	2	3	4		5		6	7	8		9	10		11		12		13

1. T — Travel of Sliding (15, 20, 30, 45, 60, 100mm are available)
2. Product Lines of LP , LD
   With Case Type Slide Potentiometers : LP, LD Series
3. Number of Unit
   1 — Single Unit
   2 — Dual Unit

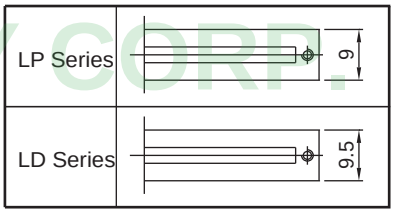

4. Type of Metal Case : A- TLP1(2)A-B ; B-TLP1(2)B-B; C- TLP1(2)C-B

TLP1(2)A-B	TLP1(2)B-B	TLP1(2)C-B
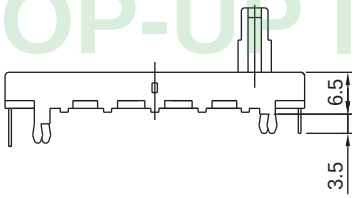	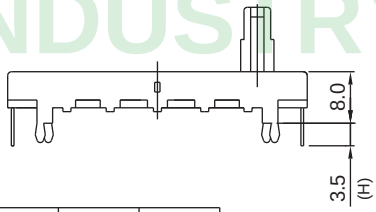	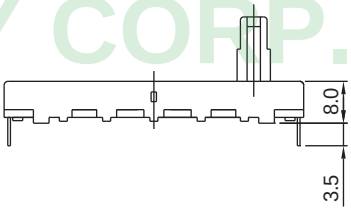
	Code / B / B1 H / 3.5 / 4.0	
TLD1(2)A-B	TLD1(2)C-B	
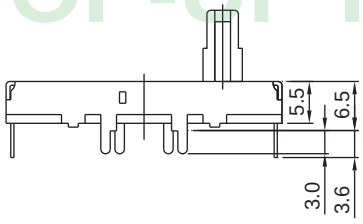	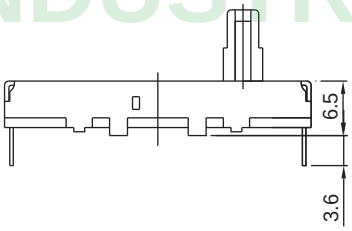	

(Drawing 1)

5. Type of Terminal : B - P.C.B Type
6. Type of Slide Lever (See Drawing 2)
7. Slide Lever Metarial : M - Metal Lever ; P - Insulated Lever
8. Lever Length (See Drawing 2)
9. Type of Taper (See Taper Chart page 220)
10. Resistance Value
11. Number of Clicks : Blank - None ; 1C - Center Click
12. With dust cover : DC
13. Serial No.

TOP-UP INDUSTRY CORP.

LP Series Code Explanation

T	LP	1	A	- B	- CH1	M	10 .4	- A	10K	- 1C	- DC	- □□□
1	2	3	4	5	6	7	8	9	10	11	12	13

(Drawing 2)

Metal Lever Type

Lever -Type	CH1				D1					C1						B1			
Dimensions	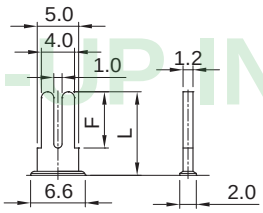				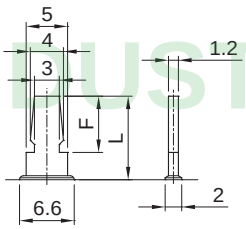					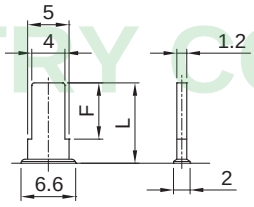						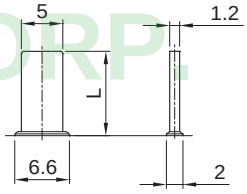			
	L	10.4			L	10.4	15	20	25	L	10	15	17.3	20	25	L	10	15	
	F	7			F	7	10	10	10	F	7	10	10	10	10				

Insulated Lever Type

Lever -Type	C							B					CA				
Dimensions	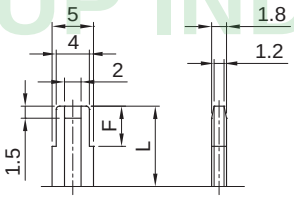							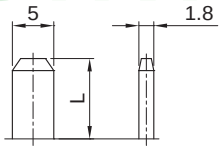					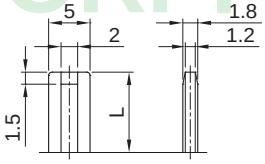				
	L	5	10	12.5	15	18	20	L	10				L	5	10		
	F	0	5	5	5	5	5										

P.C.B Mounting Hole Detail

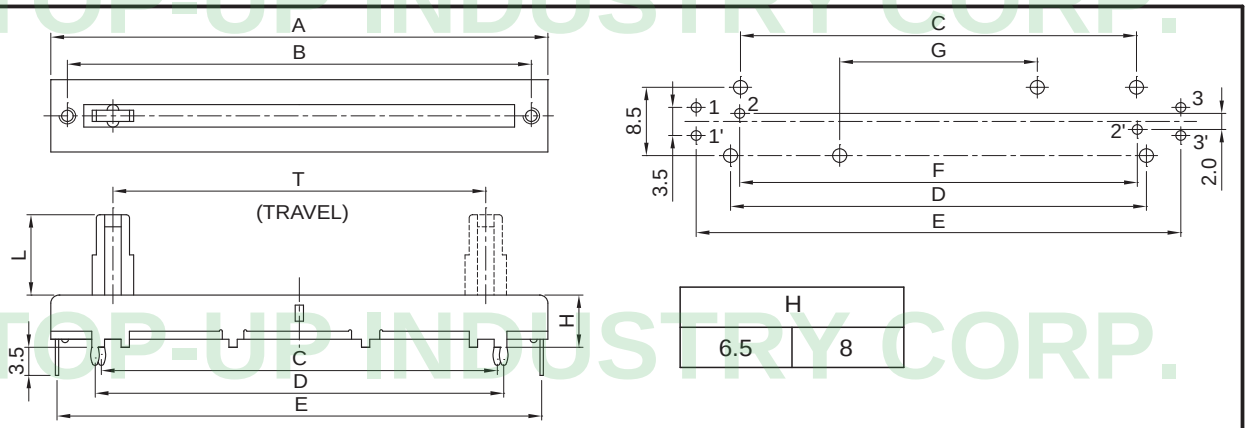

H	
6.5	8

MODE	T	A	B	C	D	E	F	G
15LP1A-B 15LP1B-B 15LP1C-B 15LP2A-B 15LP2B-B 15LP2C-B	15	30	26	17.8	20.2	28.5	18	
20LP1A-B 20LP1B-B 20LP1C-B 20LP2A-B 20LP2B-B 20LP2C-B	20	35	31	22.8	25.2	33.5	23	
30LP1A-B 30LP1B-B 30LP1C-B 30LP2A-B 30LP2B-B 30LP2C-B	30	45	41	32.8	35.2	43.5	33	
45LP1A-B 45LP1B-B 45LP1C-B 45LP2A-B 45LP2B-B 45LP2C-B	45	60	56	47.8	50.2	58.5	48	
60LP1A-B 60LP1B-B 60LP1C-B 60LP2A-B 60LP2B-B 60LP2C-B	60	75	71	62.8	65.2	73.5	63	
100LP1A-B 100LP1B-B 100LP1C-B 100LP2A-B 100LP2B-B 100LP2C-B	100	117	112.5	104.6	107	115.2		20

The drawing and specification are for reference only. For further detail, please contact Top-Up head office.

STANDARD TYPE SLIDE POTENTIOMETERS(LP SERIES)

Electrical Characteristics:

Total resistance	1KΩ ~1MΩ
Total resistance tolerance	±20%(more than 1MΩ ±30%)
Resistance taper	A,B,C,D,K,W,RD
Insulation resistance	100MΩ min. at 250V DC.
Withstand voltage	AC 300V(1 minute)

	Taper \ Travel		15mm	20mm	30mm	45mm	60mm	100mm
Rated power(W)	B	Single	0.05	0.1	0.2	0.25	0.2	0.25
		Dual	0.025	0.05	0.1	0.125	0.2	0.2
	Except B	Single	0.025	0.05	0.1	0.125	0.1	0.125
		Dual	0.012	0.025	0.05	0.06	0.1	0.1
Max.operating voltage (AC V)	B	Single	100	200	200	200	200	200
		Dual	100	100	200	200	200	200
	Except B	Single	50	150	150	150	150	150
		Dual	50	50	150	150	150	150

	Application	Measuring range	Specification
Gang error	Volume control	-40~0	3dB
		-30~0 (20mm travel)	4dB
	Tone control	At taper measuring point (only 50% for taper W)	2dB

	Total resistance	10KΩ	50KΩ	100KΩ	200KΩ	500KΩ	1MΩ
Residual resistance	Between terminals 1~2	10Ω	10Ω	10Ω	20Ω	20Ω	20Ω
	Between terminals 2~3	10Ω	10Ω	20Ω	20Ω	50Ω	50Ω

Mechanical Characteristics:

Operating force	0.3~2.5N(30~250gf)
Stopper strength	50N(5kgf) measuring point=5mm
Lever wobble	2(2*L)/20 mm max.(L:lever length both side)
Bending moment	25mN.m(250gf.cm)
Push pull strength	50N(5kgf)
Lever deviation	0.5 max.(one side)
Click slip-out force	0.2~2N(20~200gf)

Durabitity:

Sliding life	15,000 cycles

TOP-UP INDUSTRY CORP.

20LD1C-B	20LD2C-B	20LD1A-B	20LD2A-B

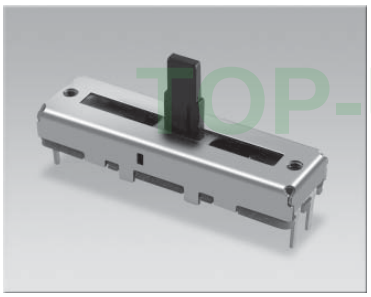
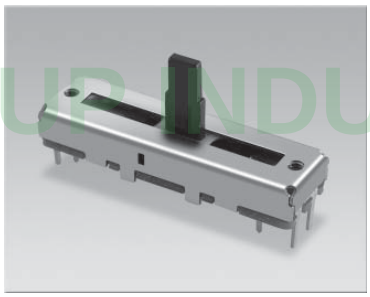
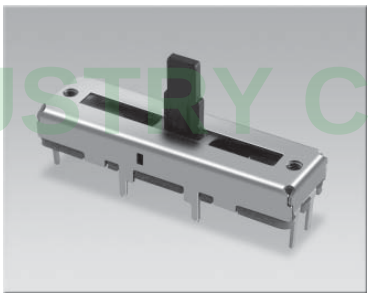
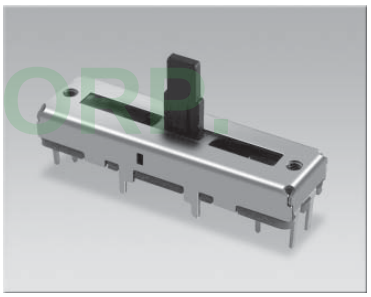

Outline Drawing | Features individual specifications

20LD1C-B

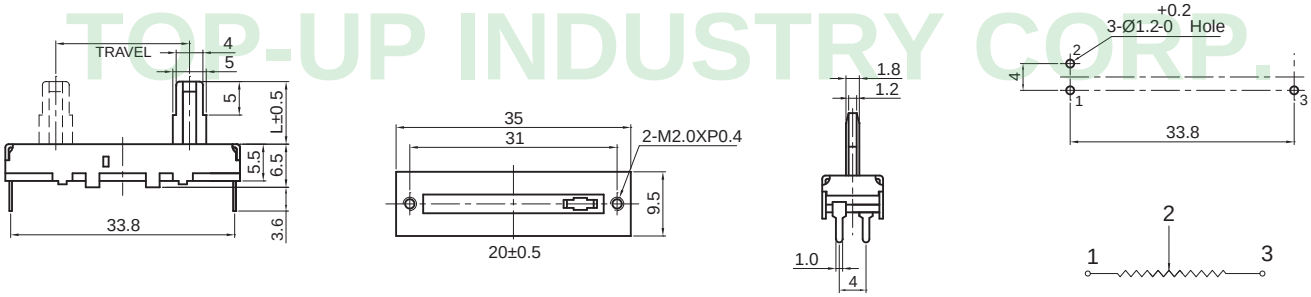

20LD2C-B

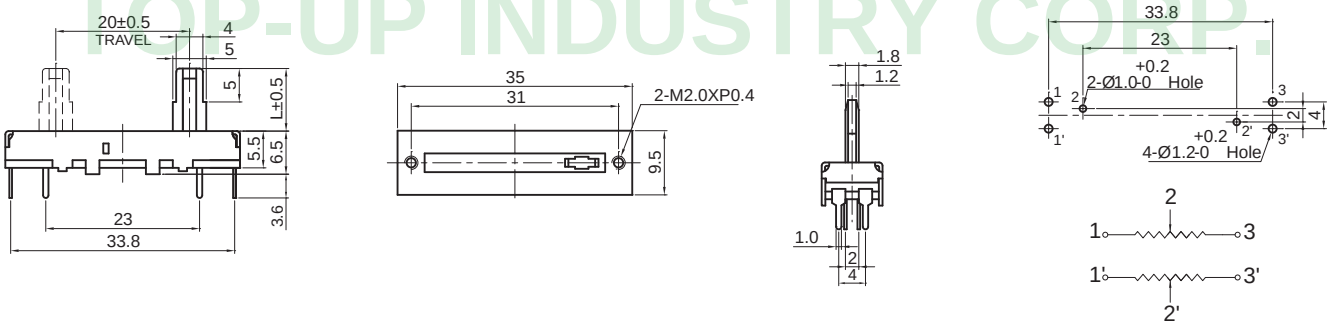

20LD1A-B

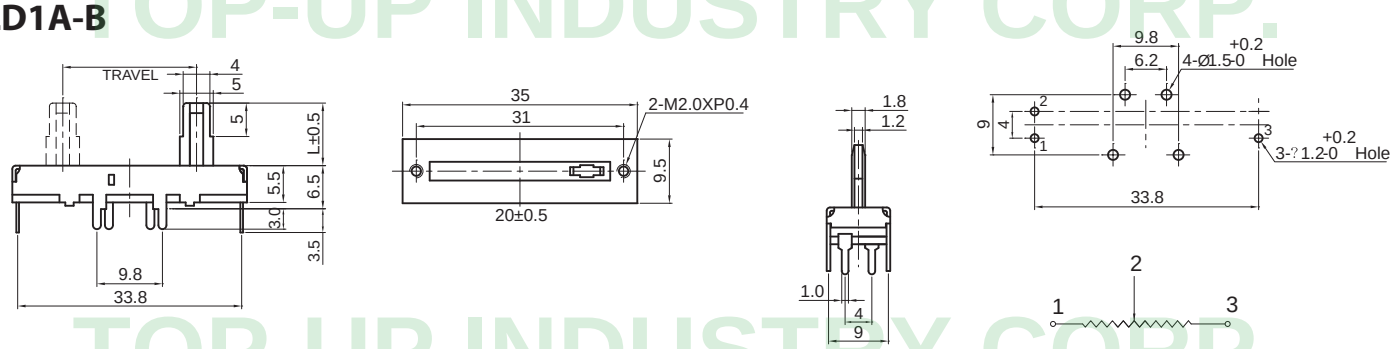

20LD2A-B

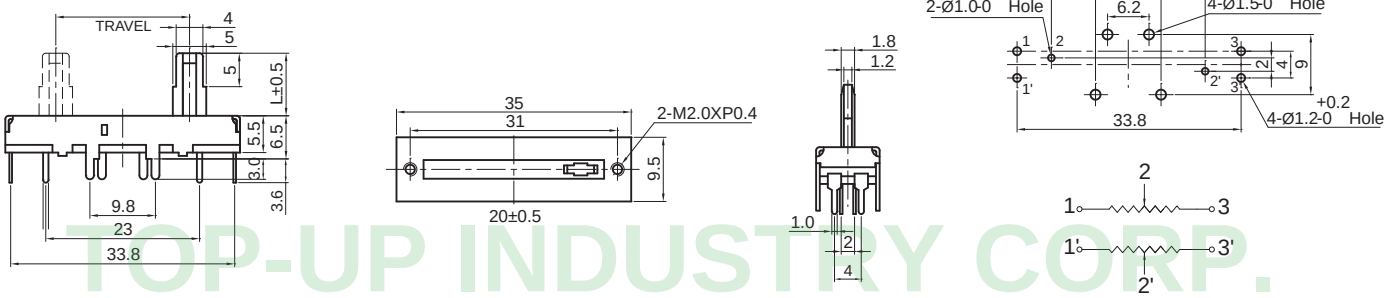

The drawing and specification are for reference only. For further detail, please contact Top-Up head office.

TLP1A-B	TLP1B-B	TLP1C-B

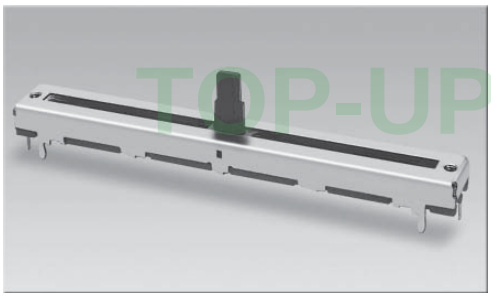
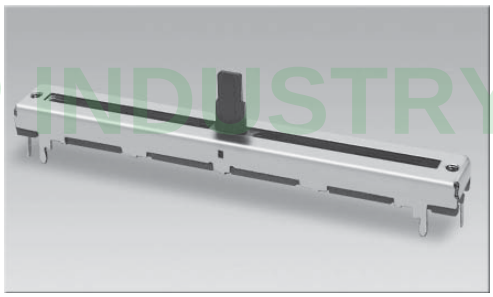
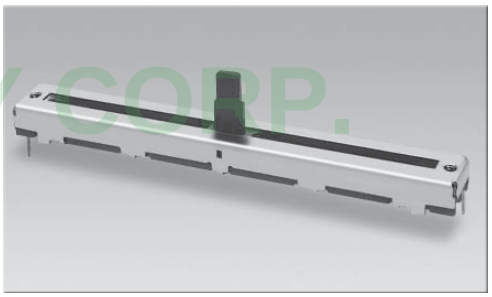

Outline Drawing | Features individual specifications

TLP1A-B

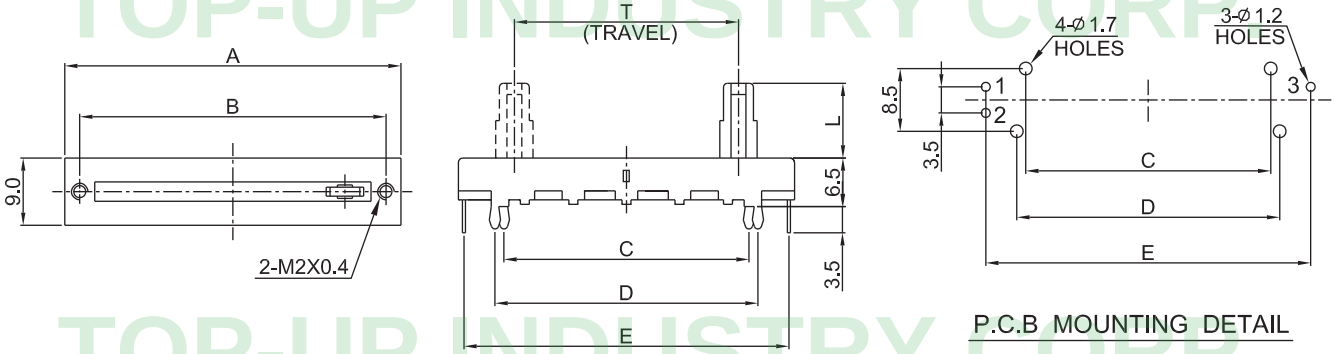

TLP1B-B

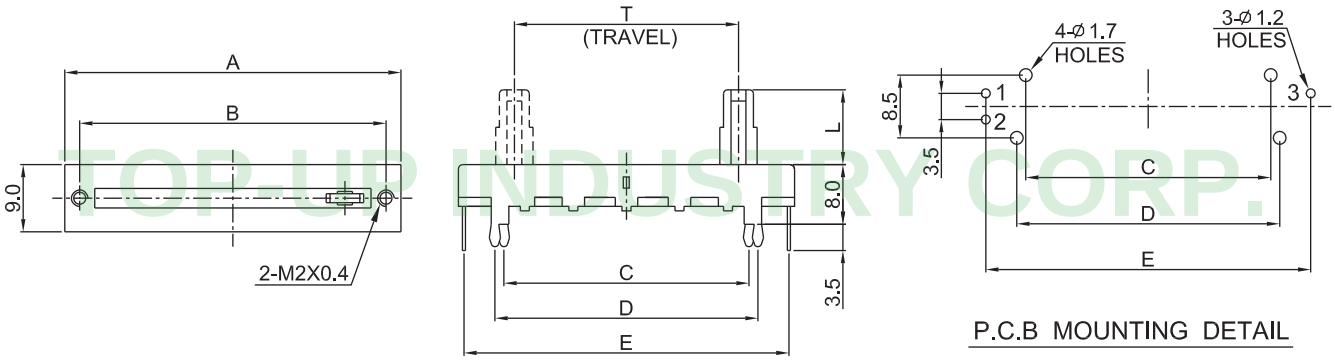

TLP1C-B

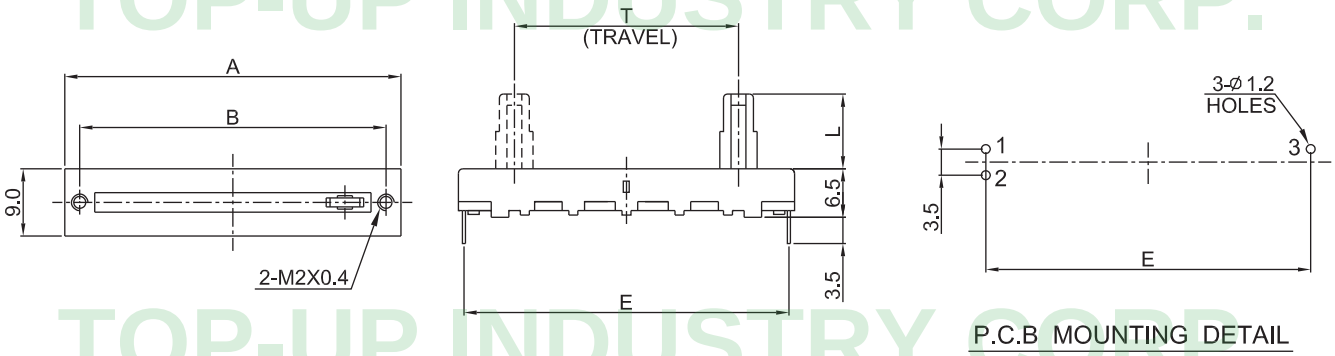

TOP-UP INDUSTRY CORP.

TLP2A-B	TLP2B-B	TLP2C-B

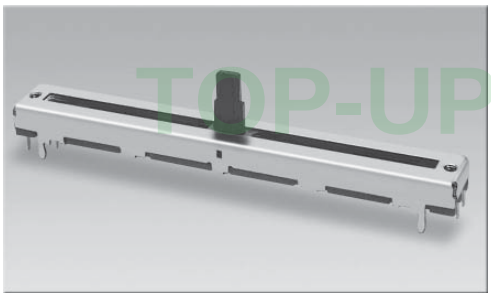
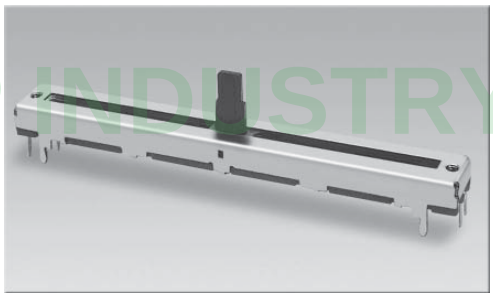
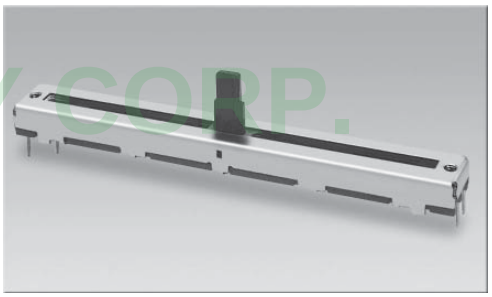

Outline Drawing | Features individual specifications

TLP2A-B

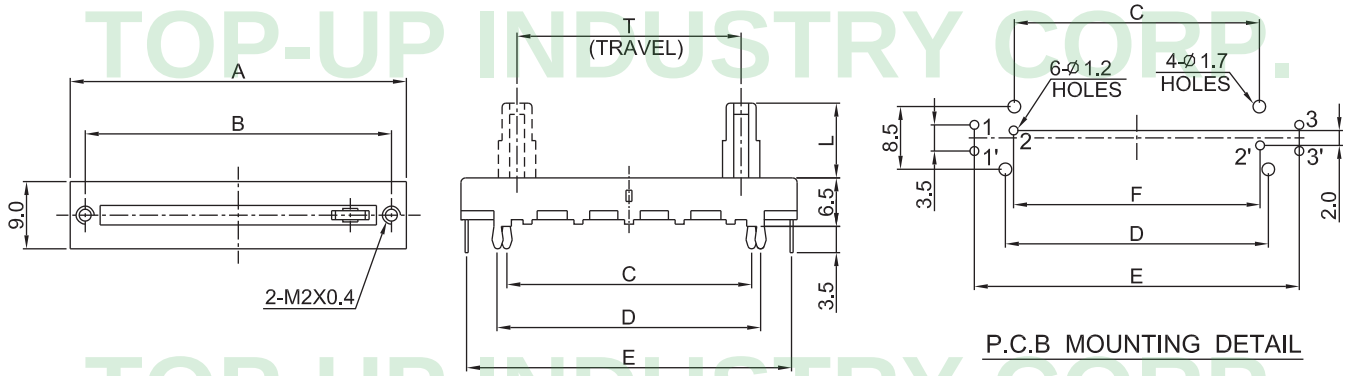

TLP2B-B

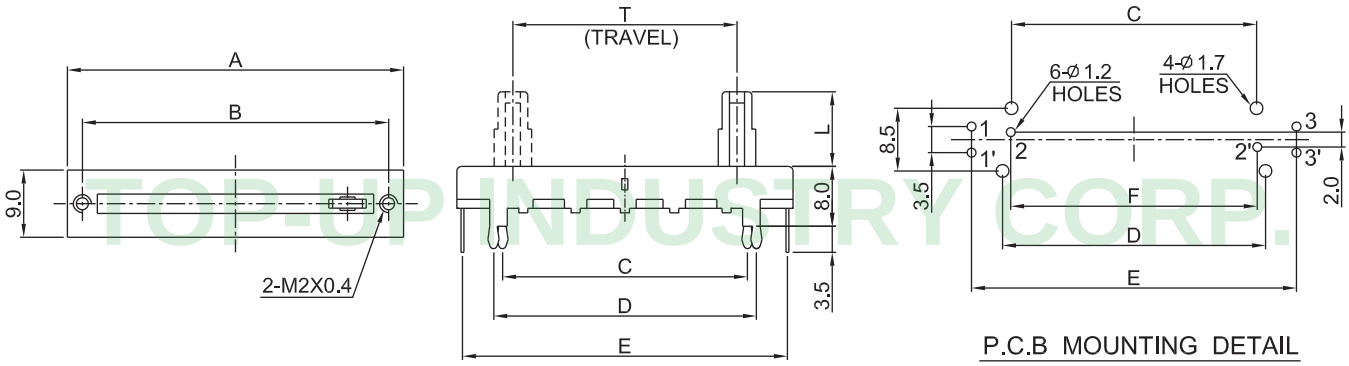

TLP2C-B

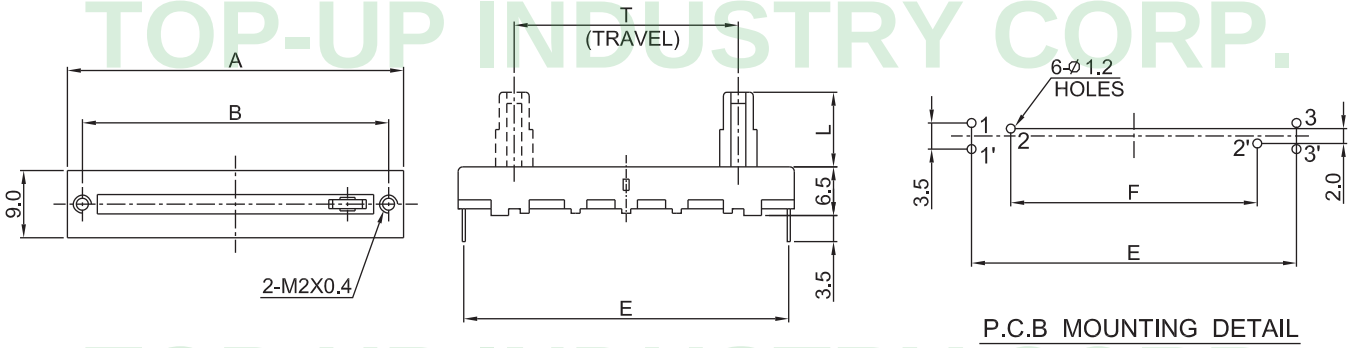

TOP-UP INDUSTRY CORP.

The drawing and specification are for reference only. For further detail, please contact Top-Up head office.

AP , APC Series Code Explanation

T	APC	2	B	-	B	-	J	W	M	15	-	A	10K	-	1C	-	□□□
1	2	3	4		5		6	7	8	9		10	11		12		13

1. T — Travel of Sliding (15, 20, 25, 30, 45, 60mm are available)
2. Product Lines of AP and APC (With Case Type Slide Potentiometers)

AP Series	Single Unit 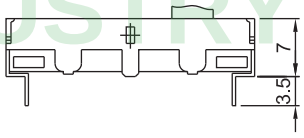 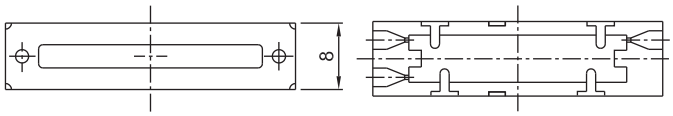 Dual Unit 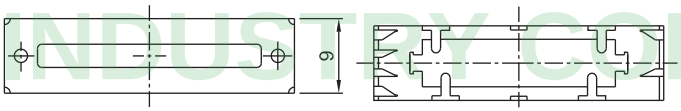
APC Series	Single Unit 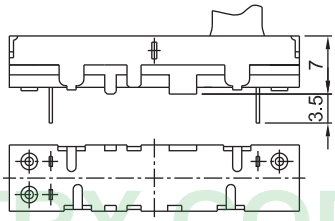

(Drawing 1)

3. Number of Unit : 1 - Single Unit ; 2 - Dual Unit
4. Snap-in Frame : Blank - Without Frame ; B - With Frame
5. Type of Terminal : B - P.C.B Type
6. Type of Slide Lever (See Drawing 2)

Lever -Type	4 (Metal Level)			6 (Metal Lever)			A (Insulated Lever)			A1 (Insulated Lever)		
Dimensions	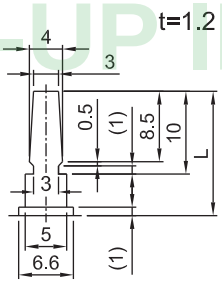			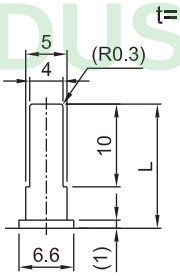			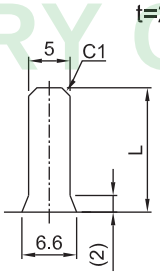			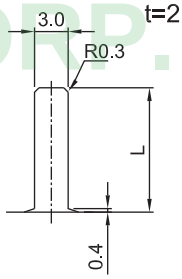		
Length (L)	15	20	25	15	20	25	10	15	20	18	19.5	

(Drawing 2)

TOP-UP INDUSTRY CORP.

AP , APC Series Code Explanation

T	APC	2	B	-	B	-	J	W	M	15	-	A	10K	-	1C	-	□□□
1	2	3	4		5		6	7	8	9		10	11		12		13

6. Slide Lever Type

Special Lever Styles and Dimensions (Drawing 2)

Lever -Type	B (Insulated Lever)			C (Insulated Lever)			J (Insulated Lever)			L (Insulated Lever)		
Dimensions	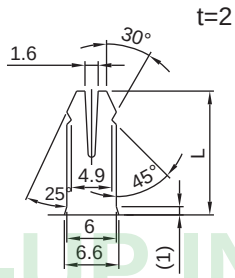			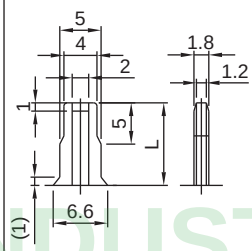			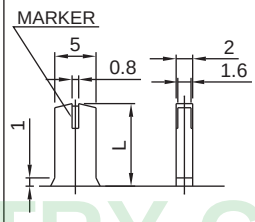			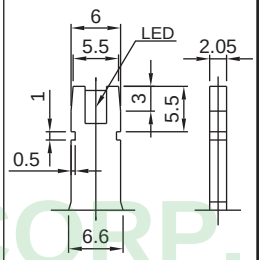		
Length (L)	10	15	20	10	15		10	15	20	15	19	
Lever -Type	S (Insulated Lever)			9-1 (Metal Lever)			9-2 (Metal Lever)			J-1 (Insulated Lever)		
Dimensions	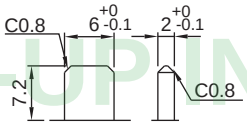			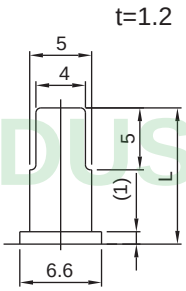			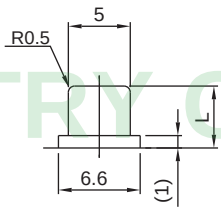			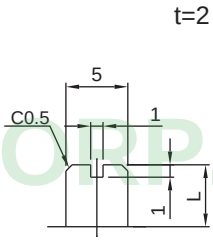		
Length (L)	7.2			10			5			5		

7. Indicator Color of Lever Type " J " : R - Red , G - Green , O - Orange , W - White

8. Lever Material : M - Metal Lever ; P - Insulated Lever

9. Lever Dimensions (See Drawing 2)

10. Type of Taper (See Taper Chart Page 220)

11. Resistance Value

12. Number of Clicks : Blank - None , 1C - Center Click

13. Serial No.

TOP-UP INDUSTRY CORP.

The drawing and specification are for reference only. For further detail, please contact Top-Up head office.

15AP2-B	20AP1-B	25AP2-B	30AP2-B

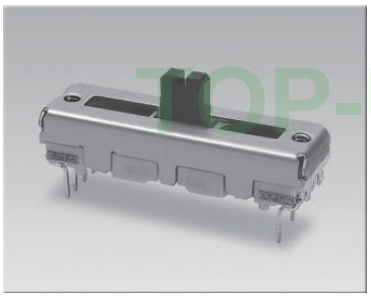
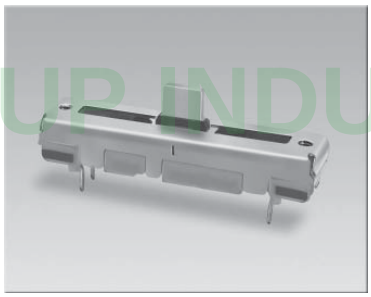
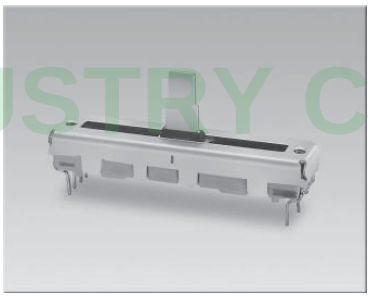
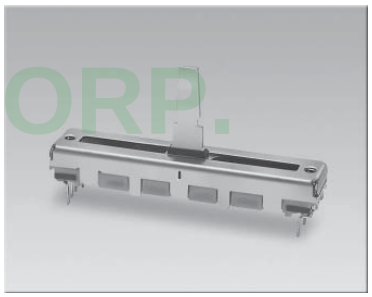

Outline Drawing | Features individual specifications

15AP2-B

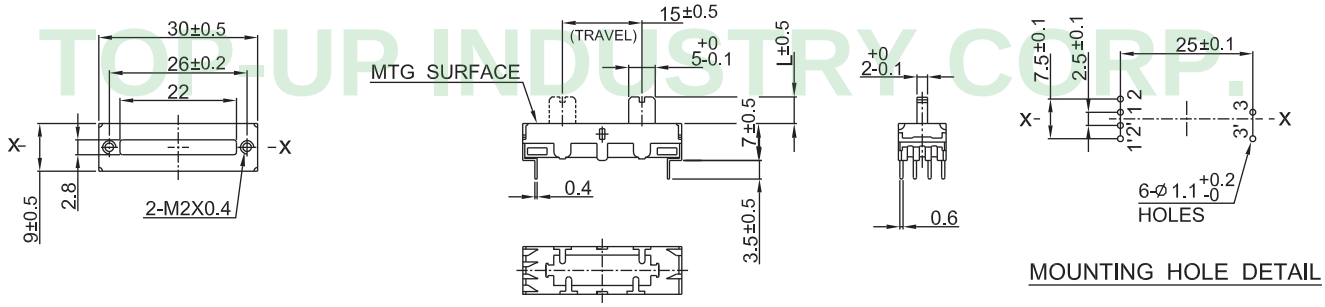

20AP1-B

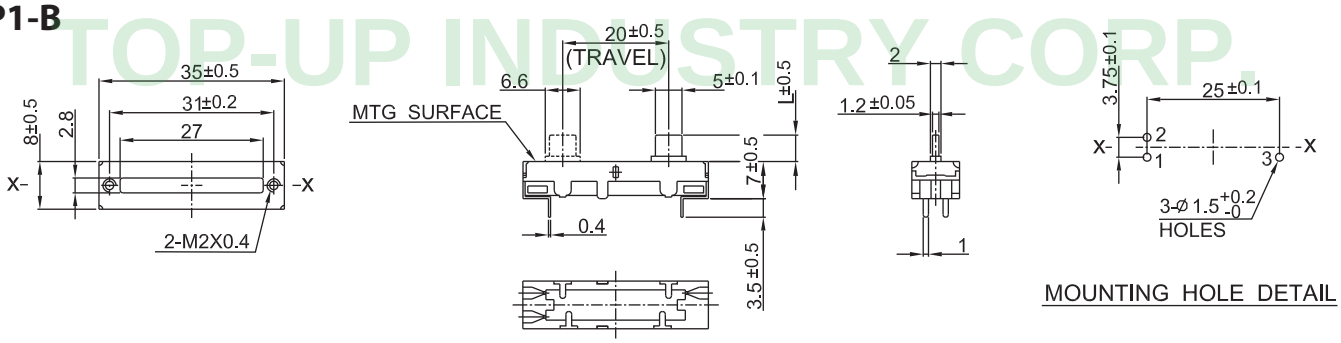

25AP2-B

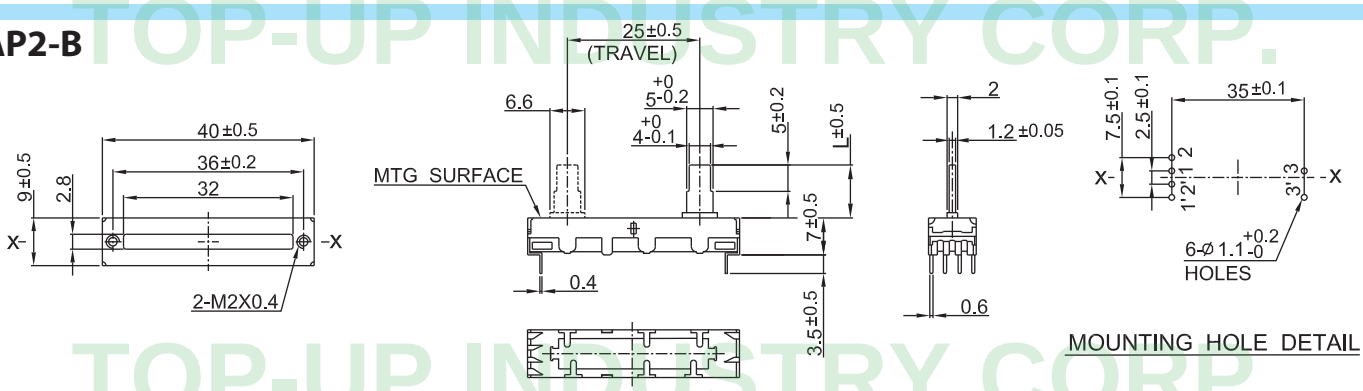

30AP2-B

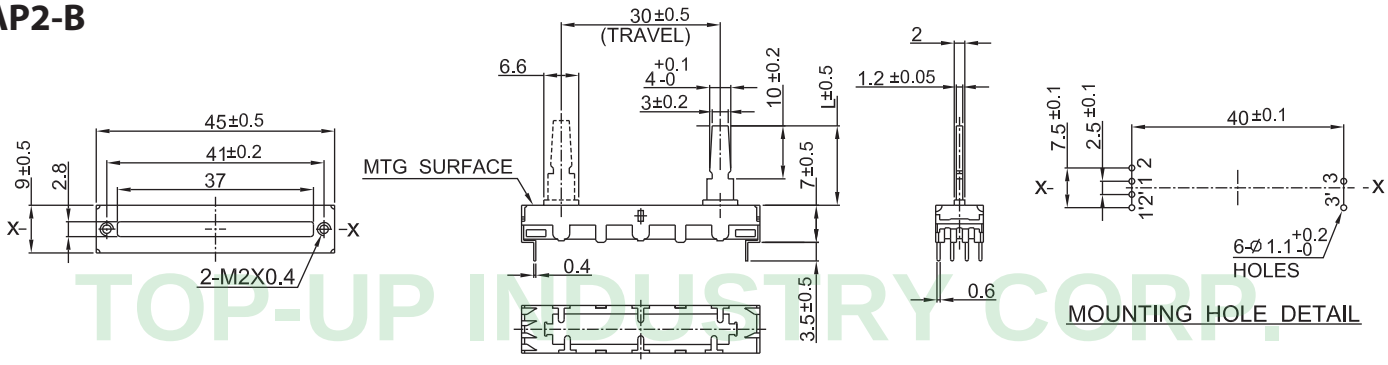

TOP-UP INDUSTRY CORP.

45AP1-B	60AP2-B
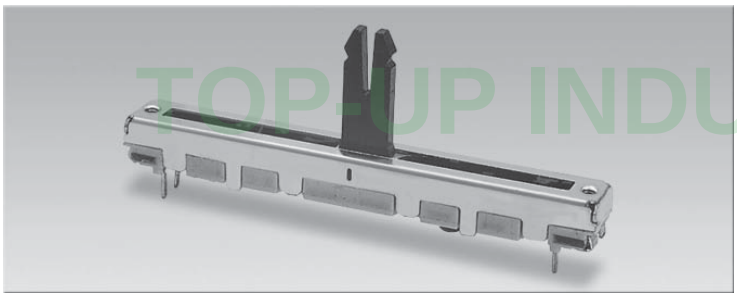	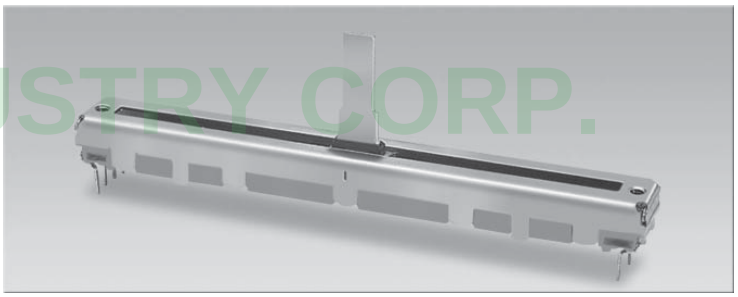
Outline Drawing	Features individual specifications

45AP1-B

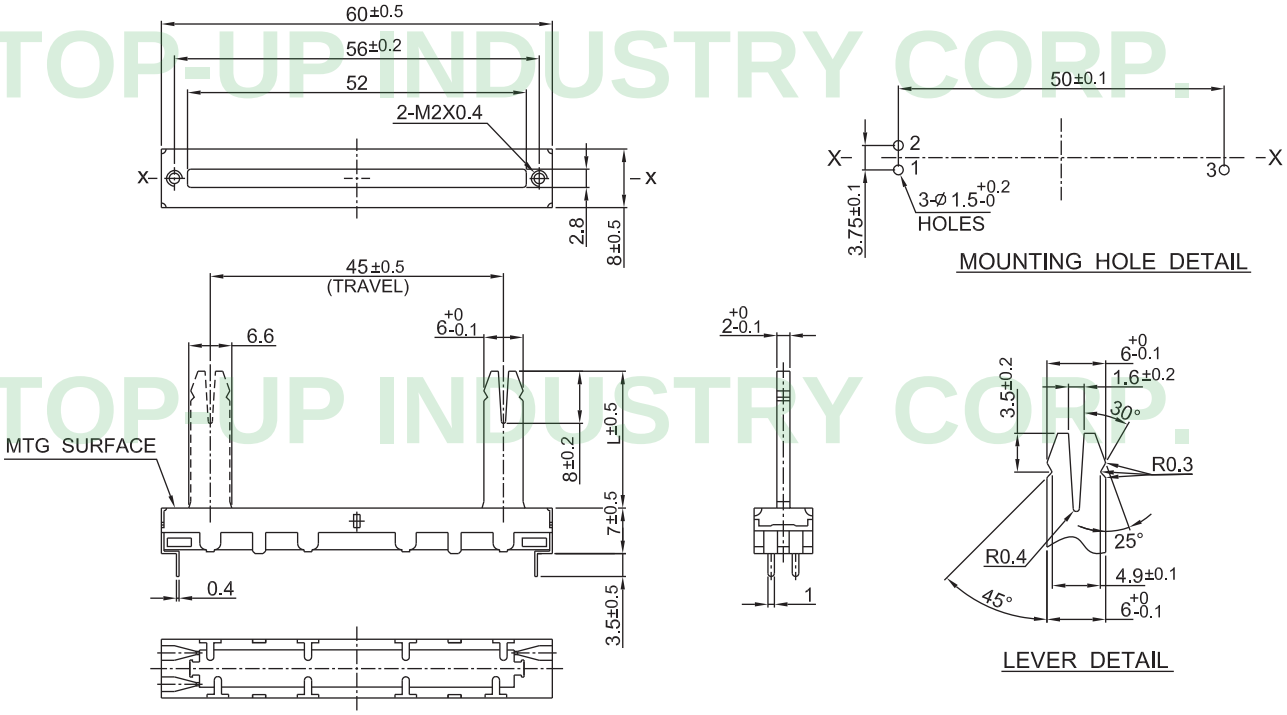

60AP2-B

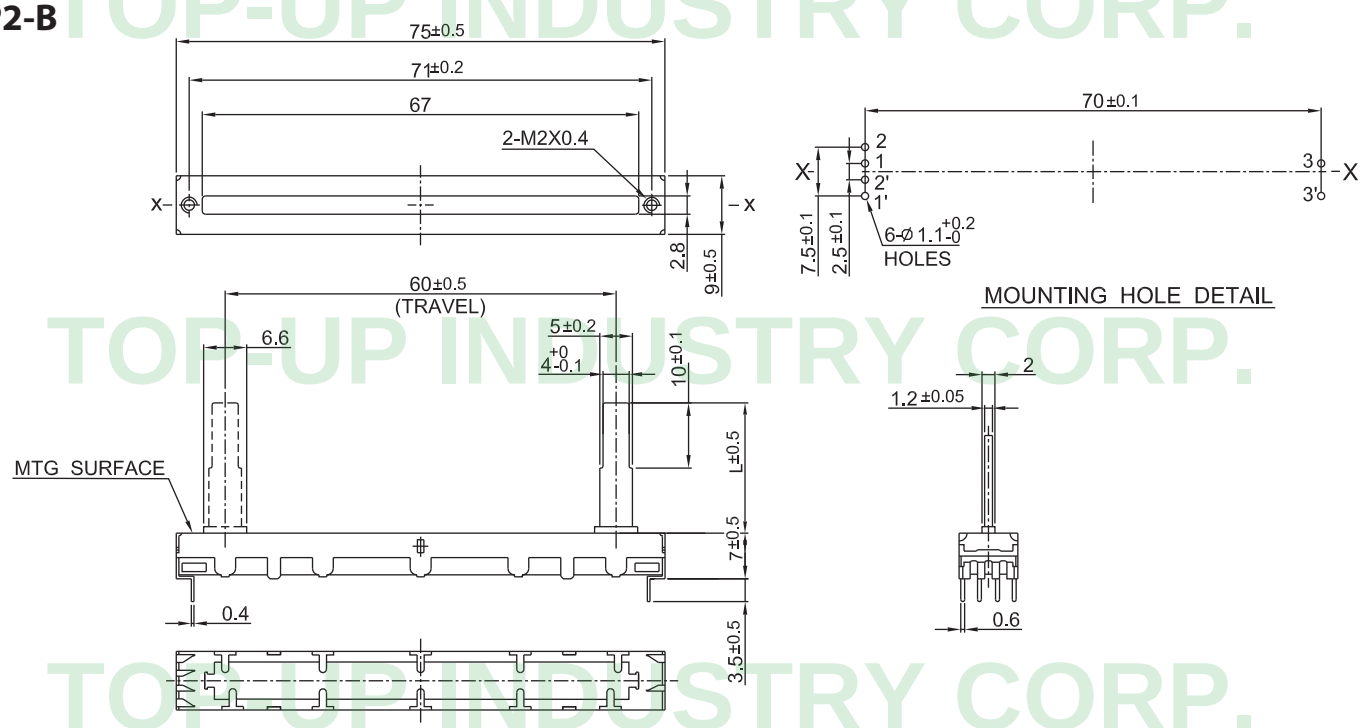

The drawing and specification are for reference only. For further detail, please contact Top-Up head office.

20TX1-B	20APC1-B-SP7.2	20APC1-B-B5P20	20APC1-B-BP20

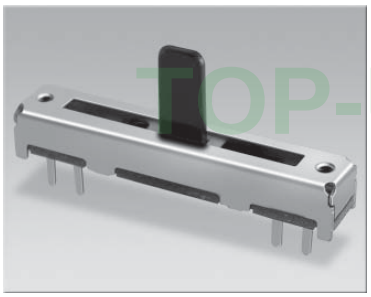
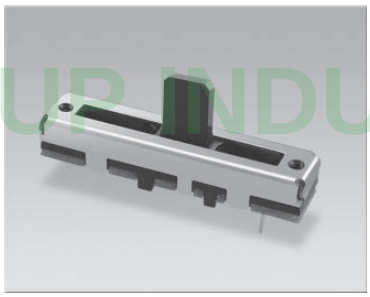
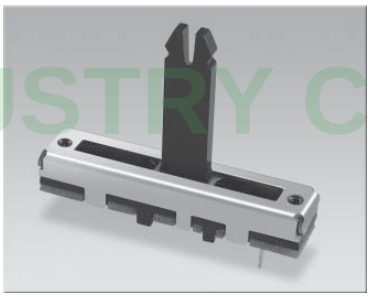
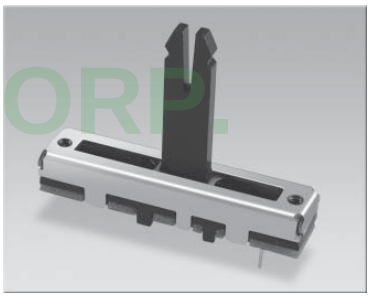

Outline Drawing | Features individual specifications

20TX1-B

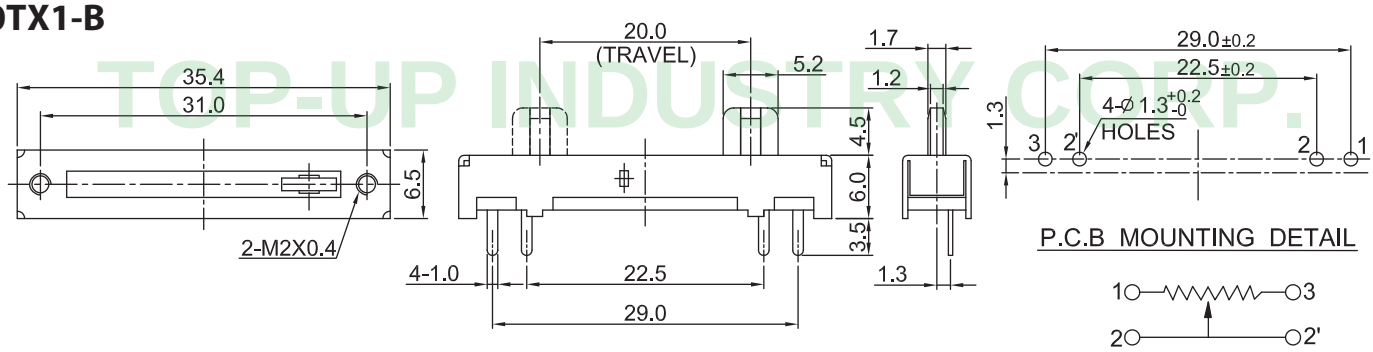

20APC1-B-SP7.2

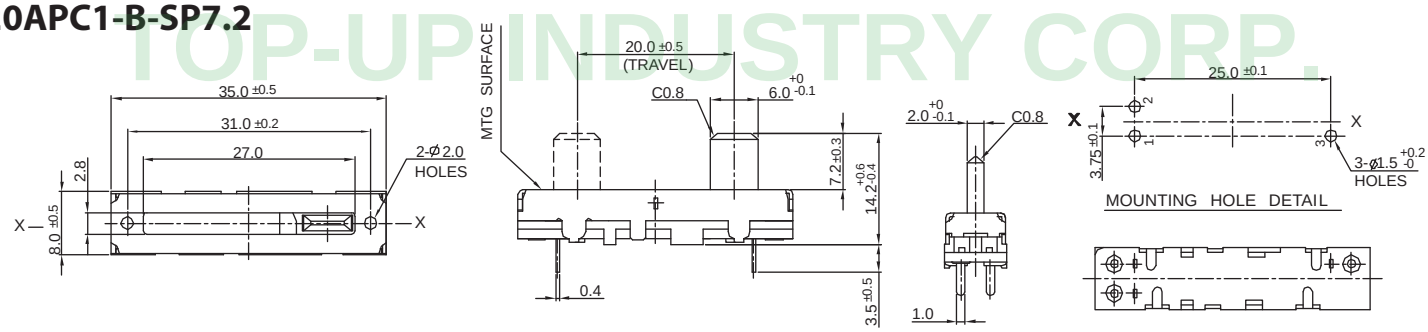

20APC1-B-B5P20

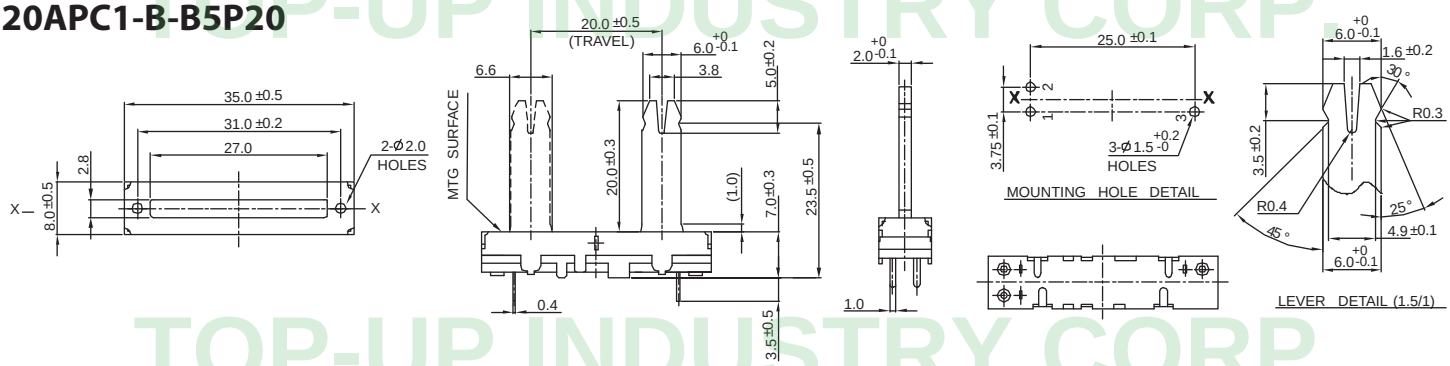

20APC1-B-BP20

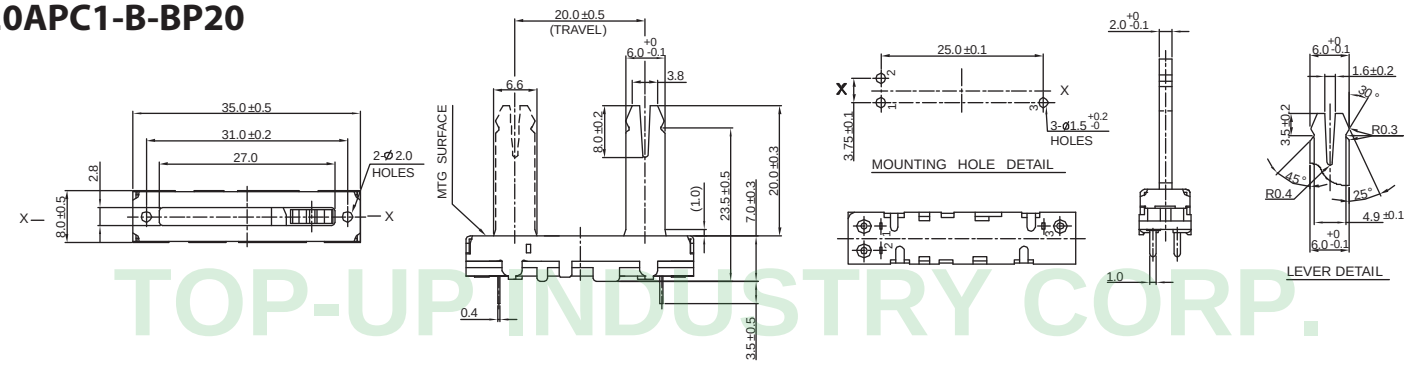

□AP1-B

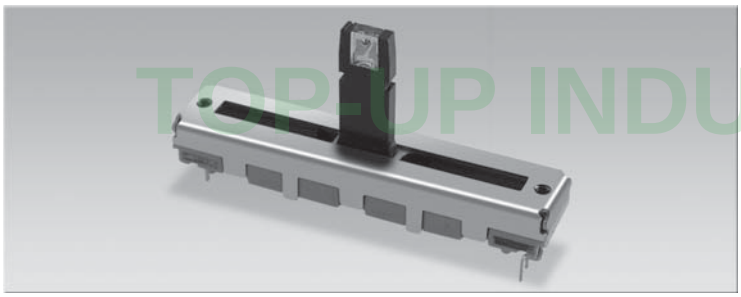

□AP1B-B

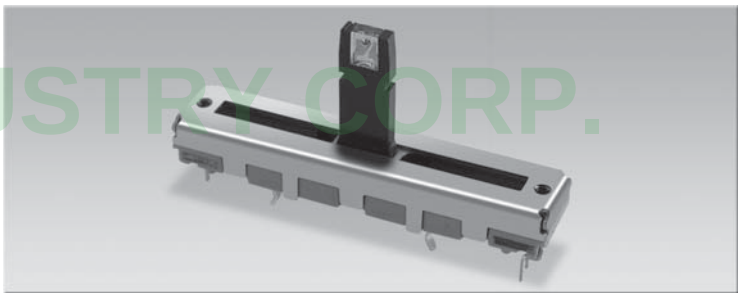

Outline Drawing

Features individual specifications

□AP1-B

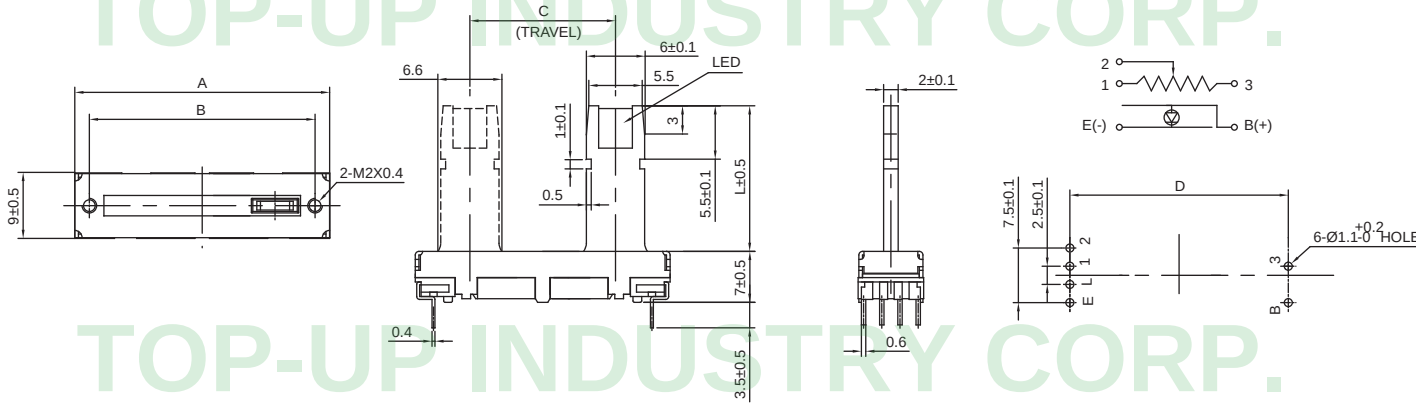

□AP1B-B

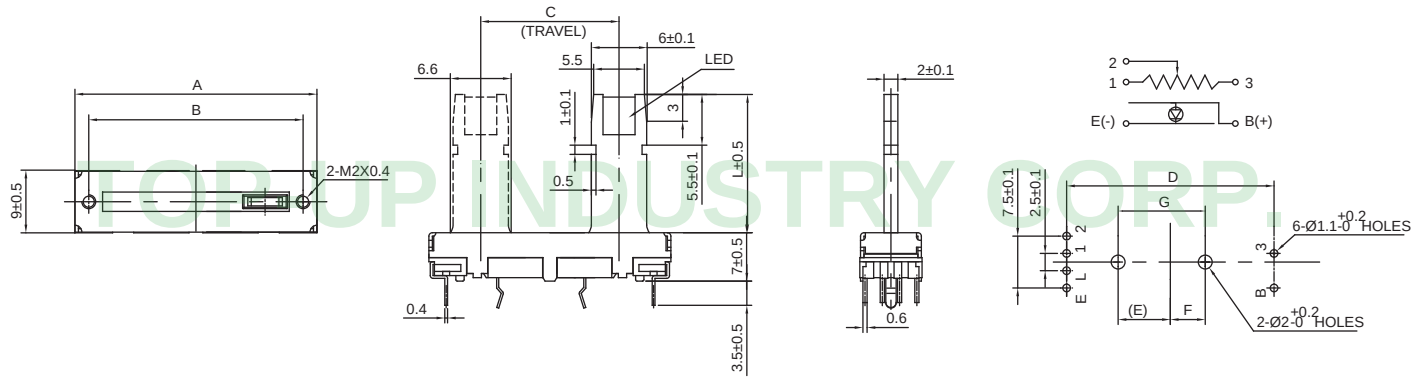

LED Color : Red / Green / Blue / Orange

MODEL		A	B	C	D	E	F	G	FRAME TYPE
20AP1-B	20AP1B-B	35	31	20	30	7.5	5	12.5	
30AP1-B	30AP1B-B	45	41	30	40	12.5	10	22.5	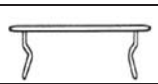
45AP1-B	45AP1B-B	60	56	45	55	17.5	15	32.5	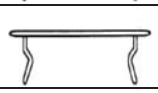
60AP1-B	60AP1B-B	75	71	60	70	25	22.5	47.5	

METAL SHAFT	
TYPE	L-Type
DIMENSIONS	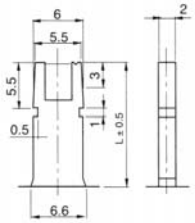
LENGTH	L 15 19

The drawing and specification are for reference only. For further detail, please contact Top-Up head office.

AM, AN Series Code Explanation

T	AM	2	B	-	B	-	1	M	12	-	A	10K	-	1C	-	□□□
1	2	3	4		5		6	7	8		9	10		11		12

1. T — Travel of Sliding
   (45 , 60 , 100mm are available)
2. Product Lines
   With Case Type Slide Potentiometers :
   AM Series
   AN Series
3. Number fo Unit
   1 — Single Unit
   2 — Dual Unit
4. Snap-in Frame

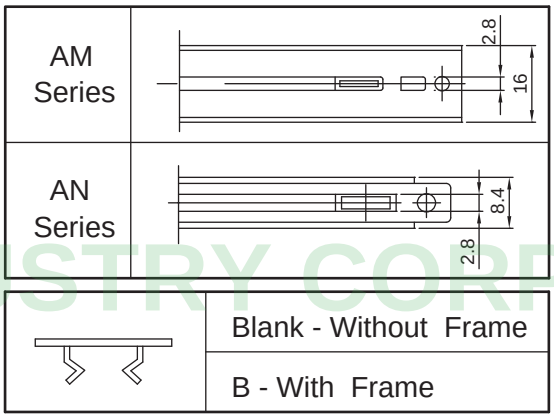

5. Type of Terminal "B" - P.C.B Type ; "A" - Lead Wiring Type

B (Printed Wiring Terminal)	A (Lead Wiring Terminal)
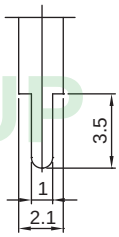	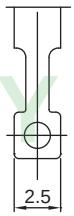

6. Slide Lever Type (Metal Lever)

Lever -Type	1	2	3	4	5
Dimensions	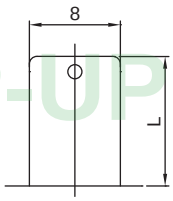	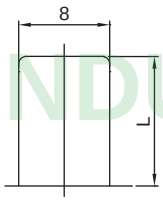	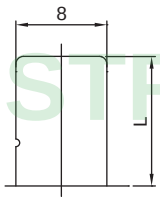	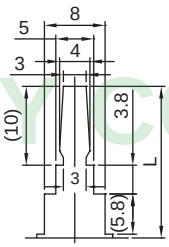	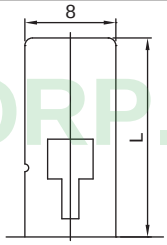
Length (L)	12	9.5	13.5	15	17.5
Lever -Type	6	9-1	9-2	C2	–
Dimensions	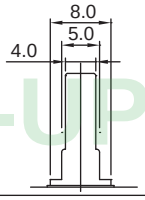	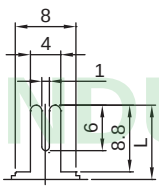	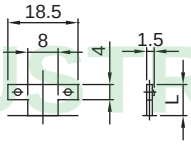	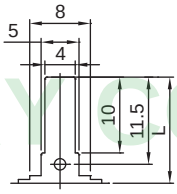	–
Length (L)	15	10	8.2	14	–

7. Lever Material : " M " - Metal Lever
8. Lever Length " L "
9. Type of Taper (See Taper Chart)
10. Resistance Value
11. Number of Clicks : Blank - None , 1C - Center Click
12. Serial No.

TOP-UP INDUSTRY CORP.

45AM1B-B	60AM1B-B	100AM1B-B

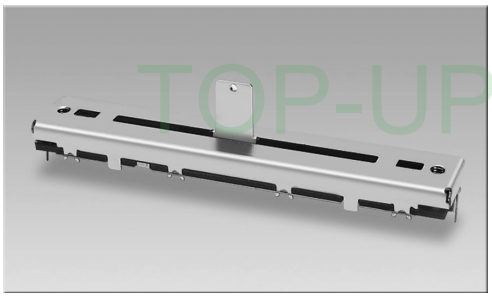
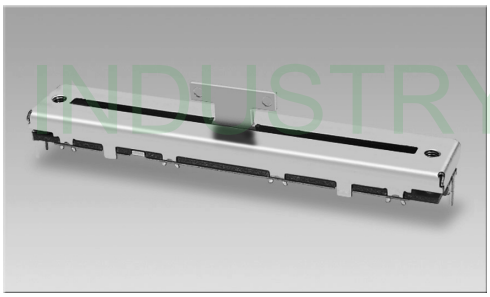
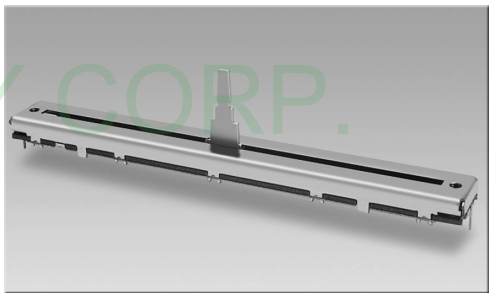

Outline Drawing | Features individual specifications

45AM1B-B

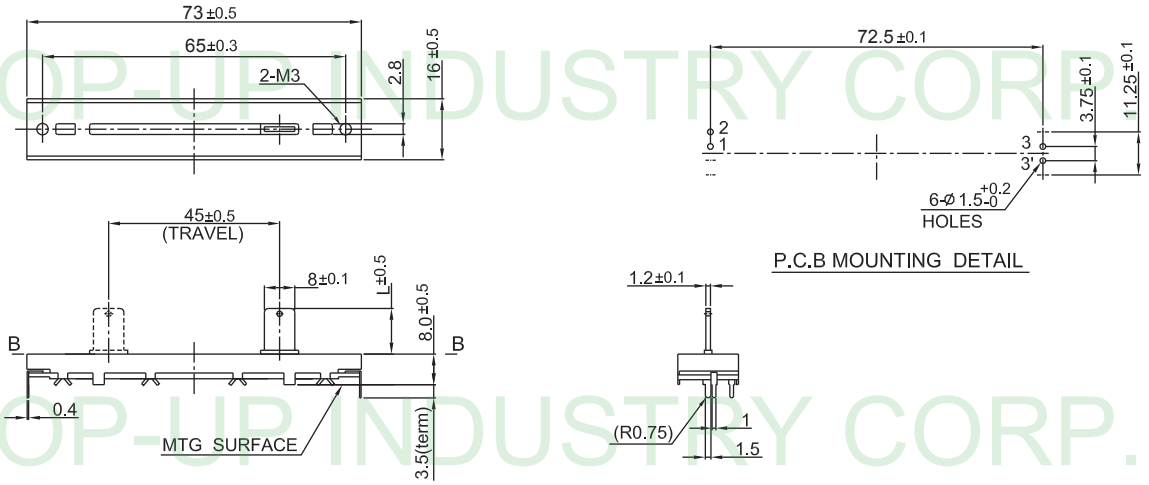

60AM1B-B

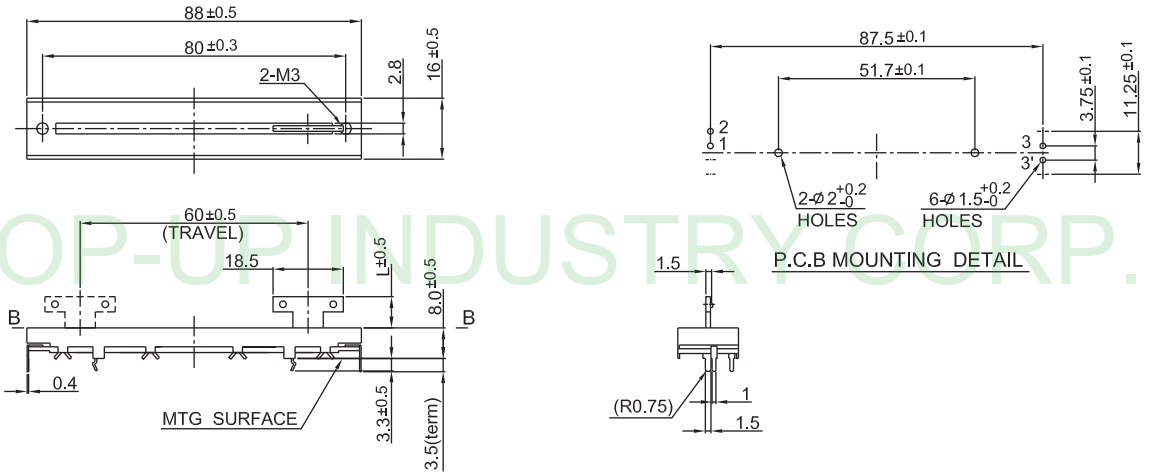

100AM1B-B

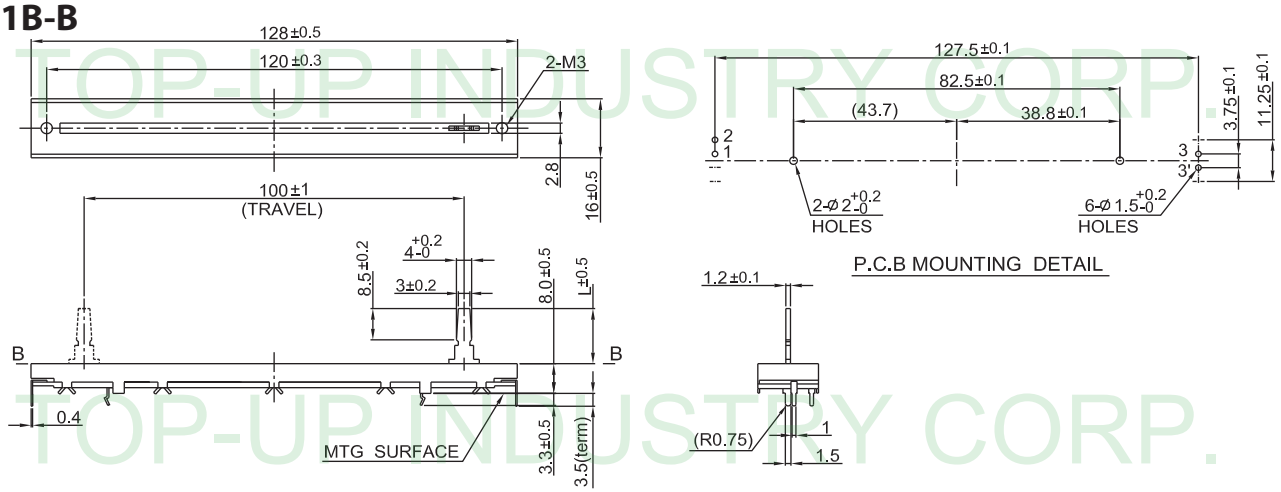

The drawing and specification are for reference only. For further detail, please contact Top-Up head office.

45AM2B-B	60AM2B-B	100AM2B-B

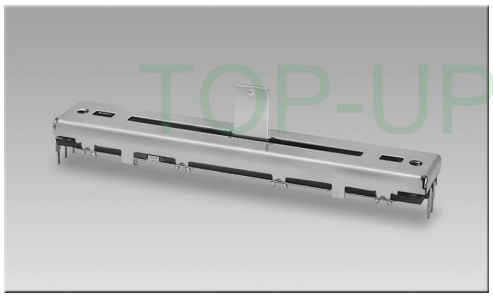
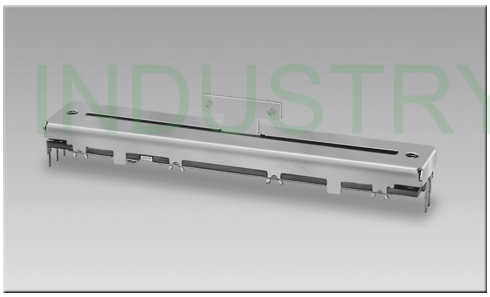
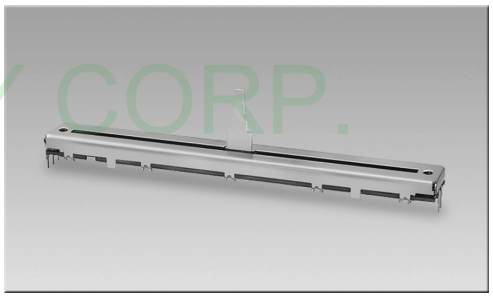

Outline Drawing | Features individual specifications

45AM2B-B

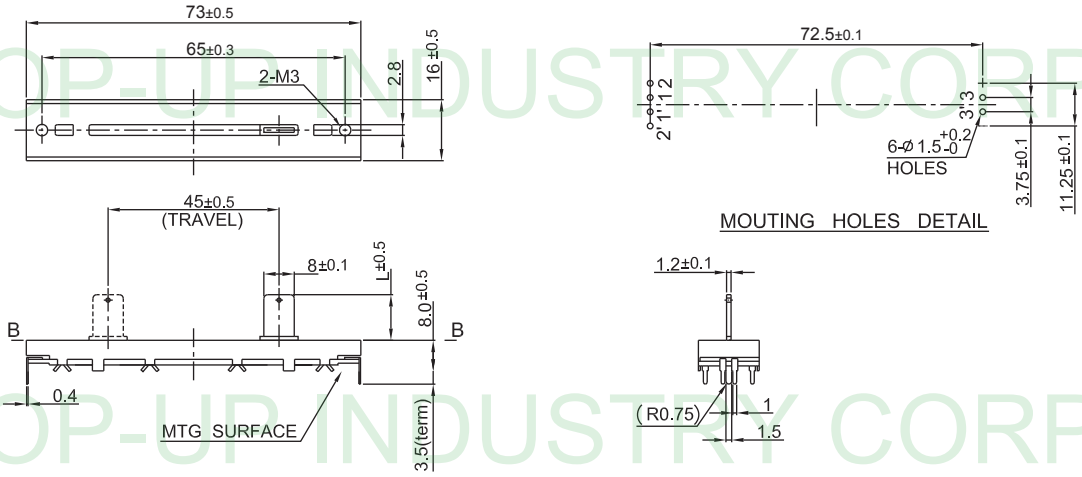

60AM2B-B

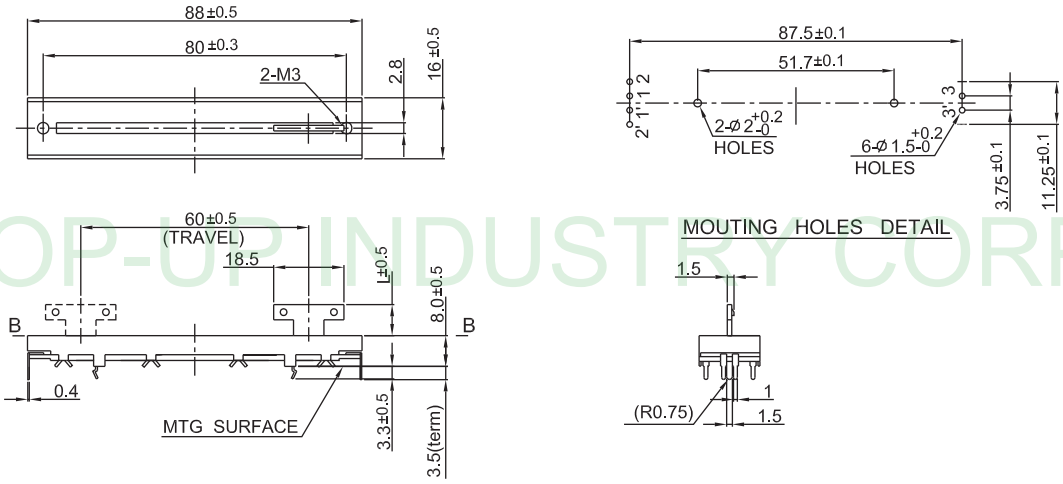

100AM2B-B

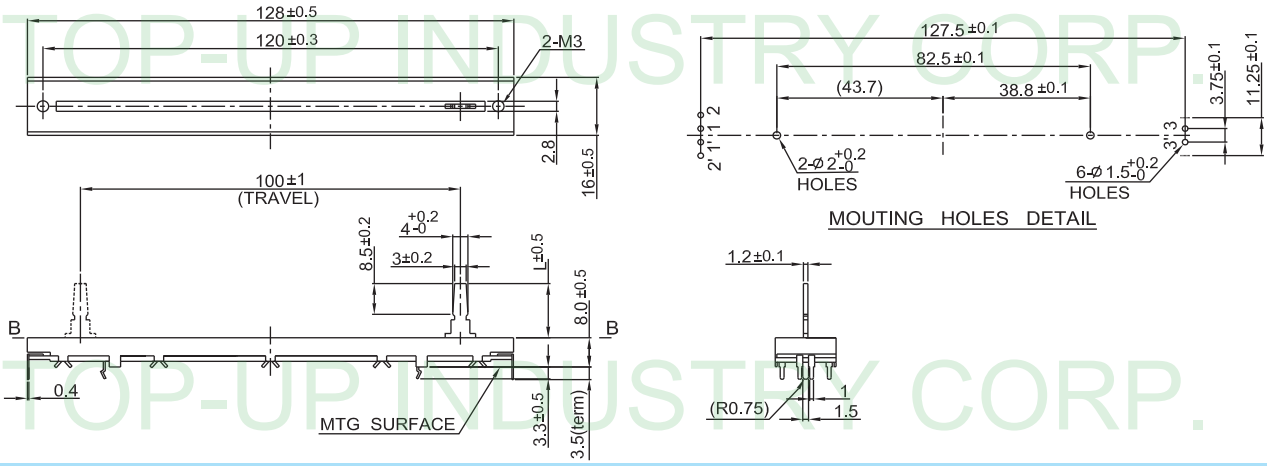

TOP-UP INDUSTRY CORP.

100AN1B-B	100AN1B-B(DC)

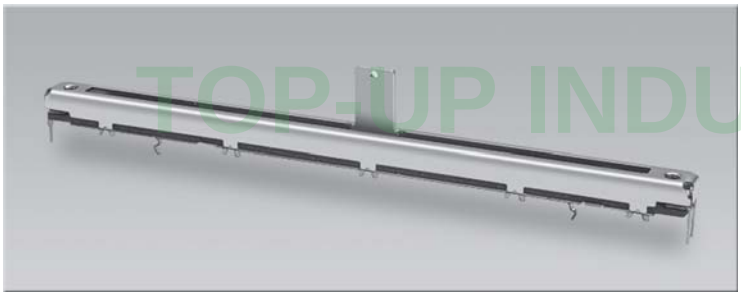

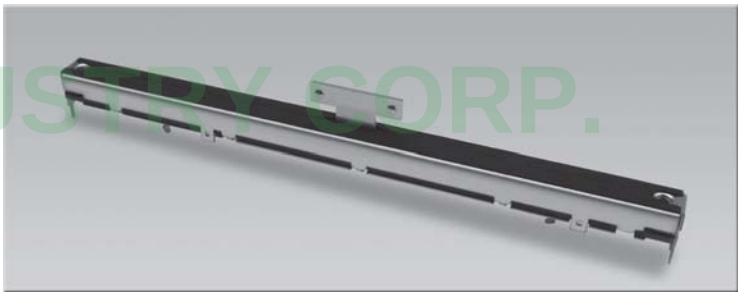

Outline Drawing	Features individual specifications

100AN1B-B

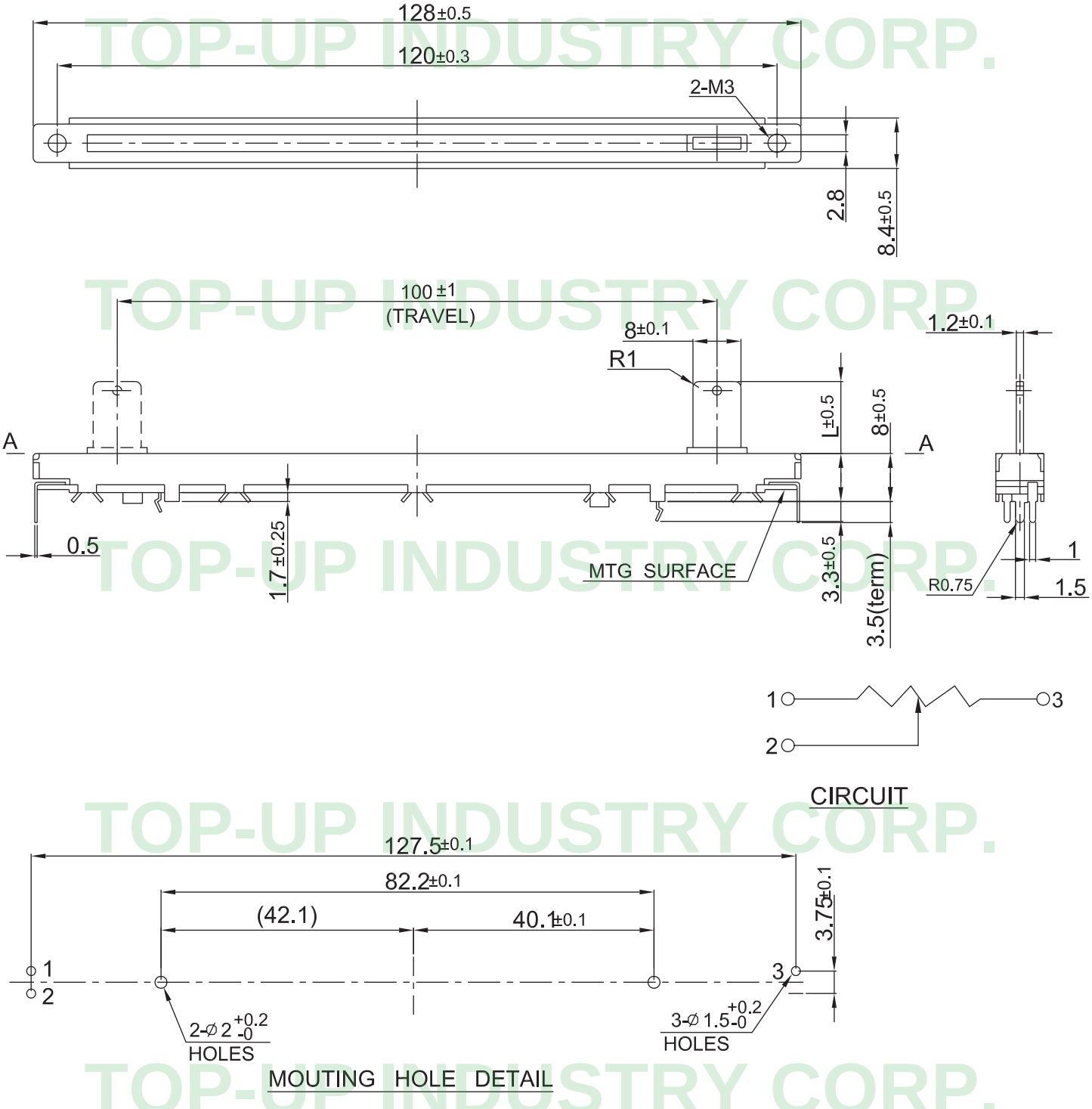

The drawing and specification are for reference only. For further detail, please contact Top-Up head office.

RF Series Code Explanation

45	RF	B	2	-	B	- C1	M	20	-	A	10K	- 1C	- □□□
1	2	3	4		5	6	7	8		9	10	11	12

1. Travel of Sliding (45 mm are available)
2. Product Lines
   With Case Type Slide Potentiometers : RF Series — Soft Feeling Type
3. RFT Series; RFK Series; RFB Series

45RFT2-B	45RFK2-A
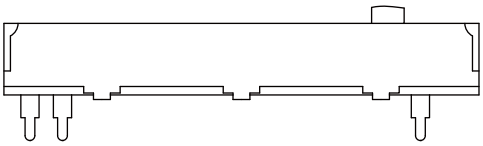	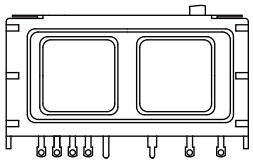
45RFB2-B	45RFZ2-A
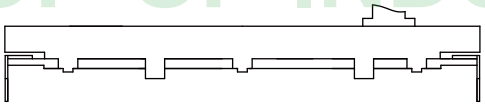	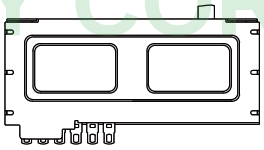

4. Number of Unit : 1 - Single Unit ; 2 - Dual Unit
5. Type of Terminal : (B - P.C.B Type) (A-Solder Lug Type)

B (P.C.B Type)	A (Solder Lug Type)
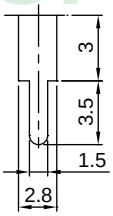	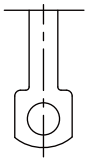

6. Type of Slide Lever (See Drawing 1)
7. Lever Material : M - Metal Lever
8. Lever Length "L " (See Drawing 1)
9. Type of Taper (See Taper Chart Page 208)
10. Resistance Value
11. Number of Clicks : Blank - None , 1C - Center Click
12. Serial No.

TOP-UP INDUSTRY CORP.

45RFT2-B	60RFT2-B	100RFT2-B

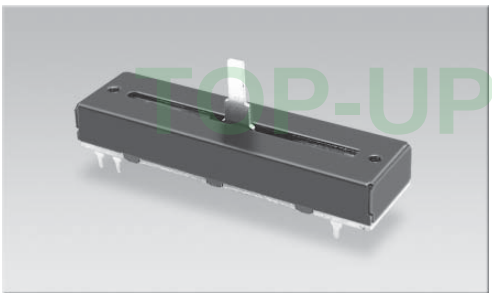
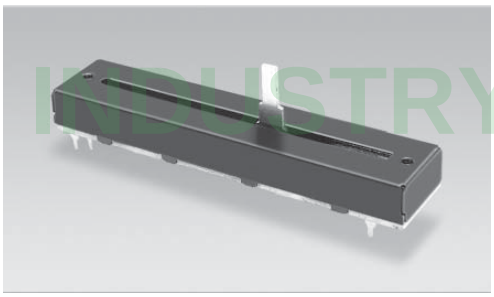
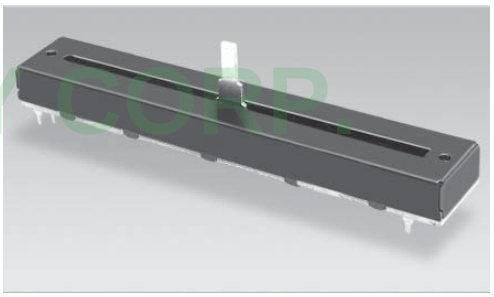

Outline Drawing | Features individual specifications

45RFT2-B

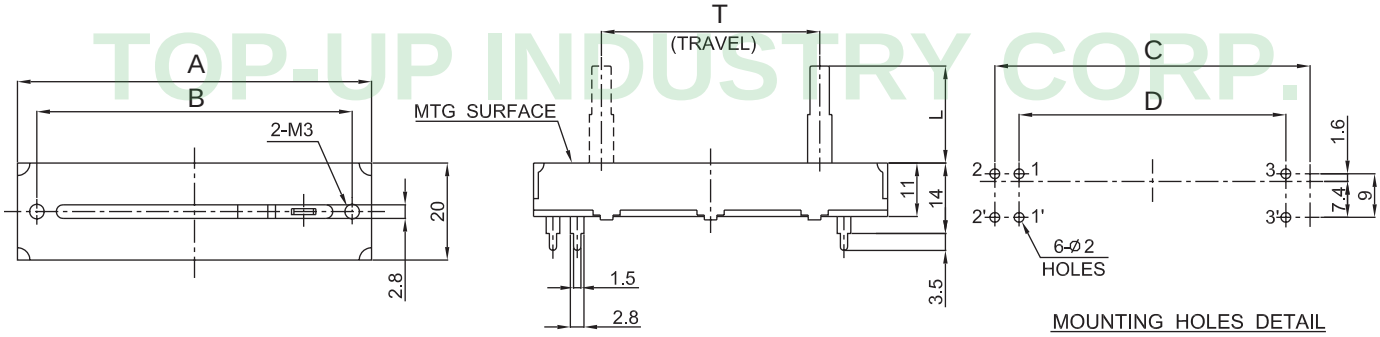

60RFT2-B / 100RFT2-B

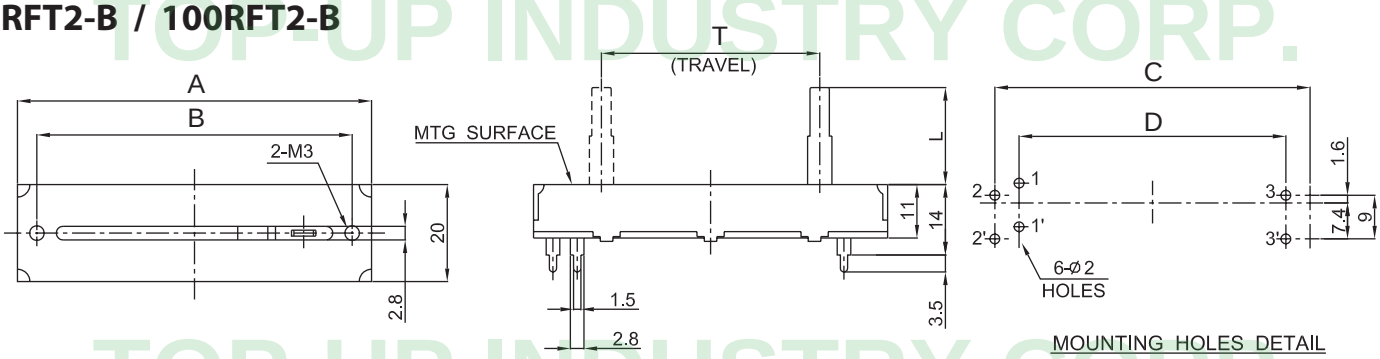

Dimensions / Model	T	A (T+28)	B (T+20)	C (T+20)	D (T+10)
45RFT	45	73	65	65	55
60RFT	60	88	80	80	70
100RFT	100	128	120	120	110

RFT			RFK
Insulated Lever			Insulated Lever
C1 TYPE	D2 TYPE	CH TYPE	C1 TYPE
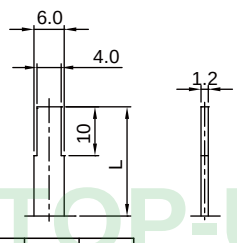	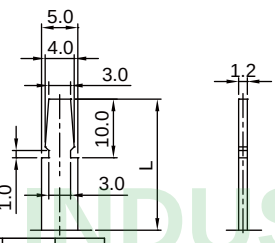	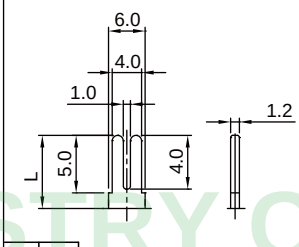	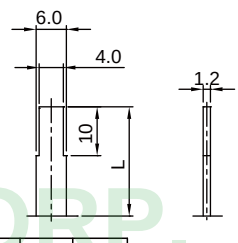
L 15 20 25	L 15 20	L 10	L 15 20

The drawing and specification are for reference only. For further detail, please contact Top-Up head office.

45RFB2-B/45RFB2-B1

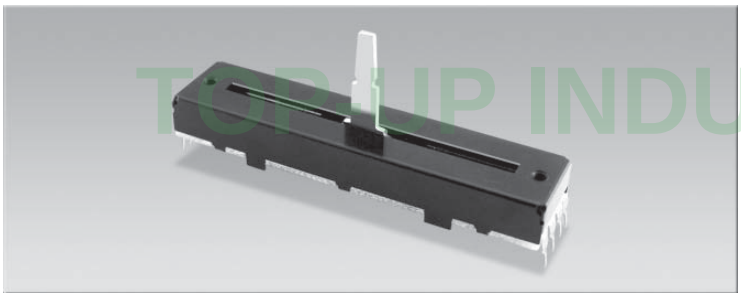

60RFB2-B/60RFB2-B1

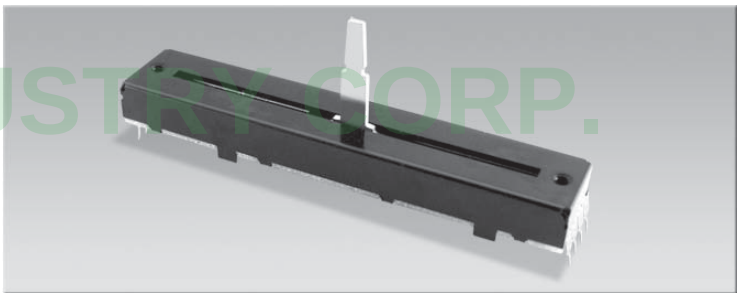

Outline Drawing

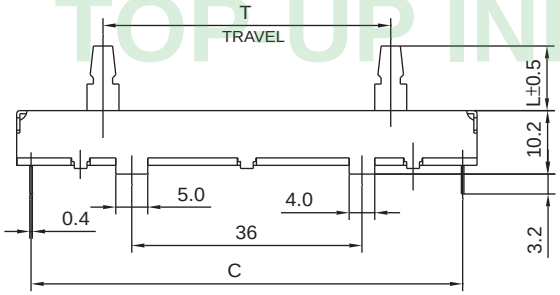

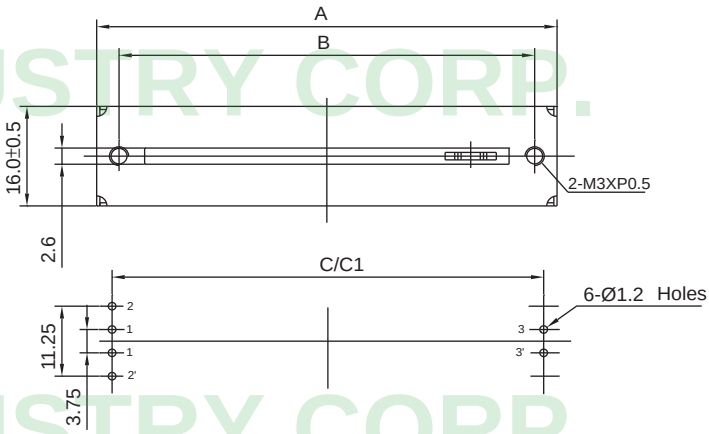

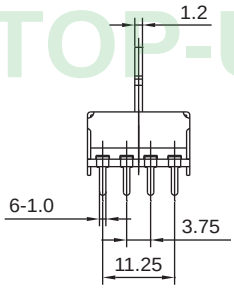

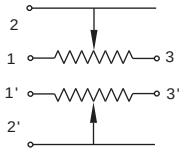

CIRCUIT

Features individual specifications

Terminal

B1	B
67.5 / 82.5	72.5 / 87.5

RFB

Insulated and Metal Lever

C1 TYPE

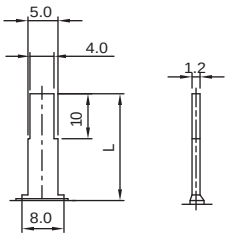

L	15	20

D2 TYPE

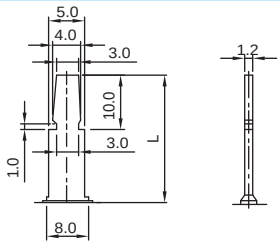

L	15	20	25

Insulated Lever

CH TYPE

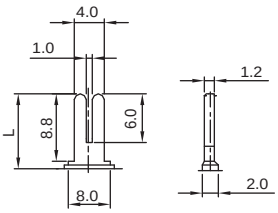

L	8	10	13	20

Metal Lever

B2 TYPE

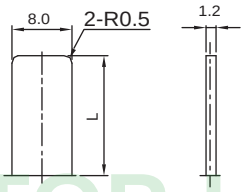

L	8	10	13	20

C4 TYPE

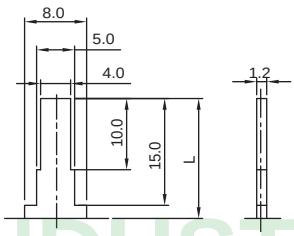

L	17

AH TYPE

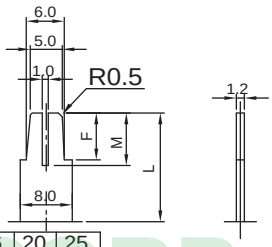

L	16	20	25
F	11	10	10
M	11	12	12

45RFK2-A	100RFK2-A

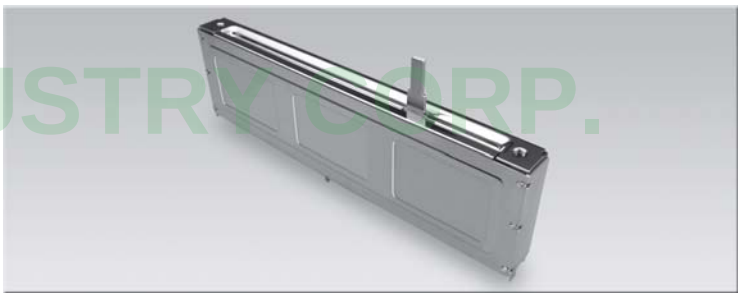

Outline Drawing	Features individual specifications

45RFK2-A

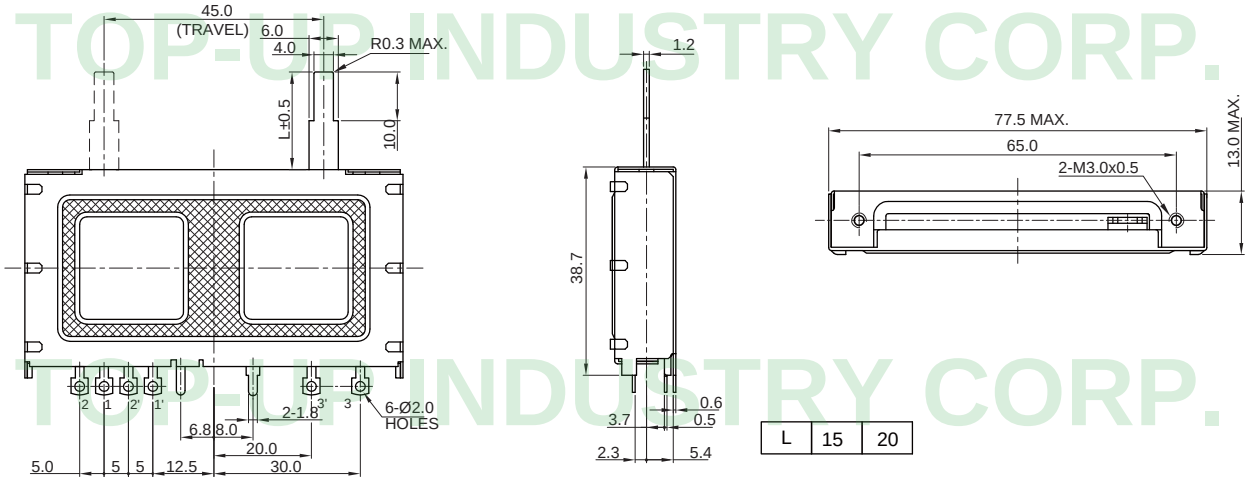

100RFK2-A

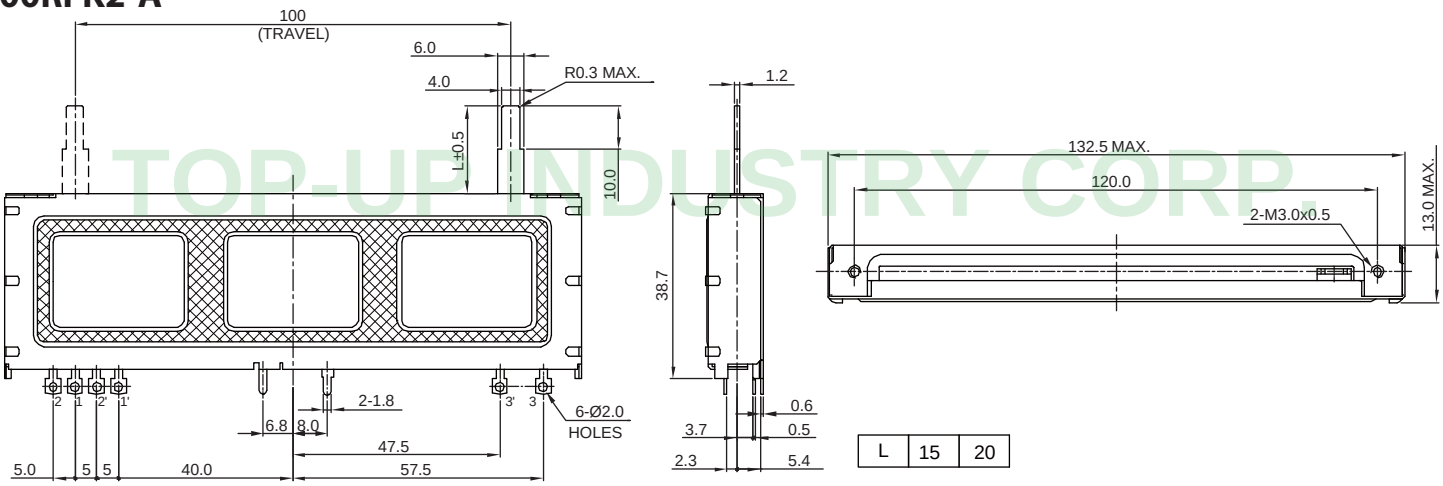

Dimensions / Model	T	A (T+32.5)	B (T+20)	C	D	E	F
45	45	77.5	65	12.5	20	30	27.5
60	60	92.5	80	20	27.5	37.5	35
100	100	132.5	120	40	47.5	57.5	55

The drawing and specification are for reference only. For further detail, please contact Top-Up head office.

45RFZ2-A

45MSL2V-D (Contactless)

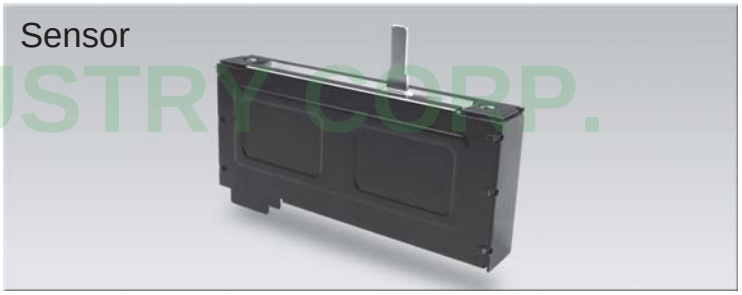

Outline Drawing

Features individual specifications

45RFZ2-A

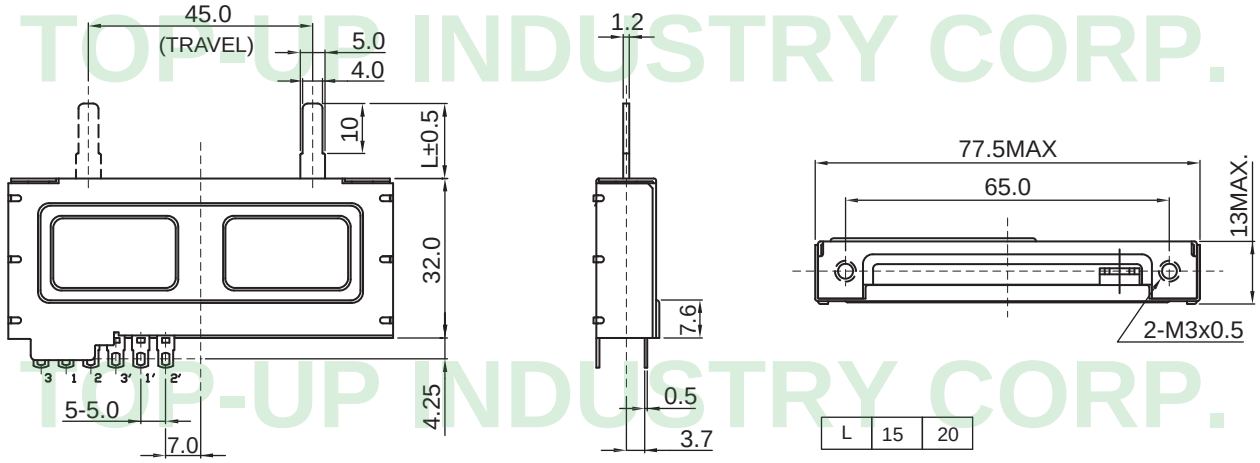

45MSL2V-D (Contactless)

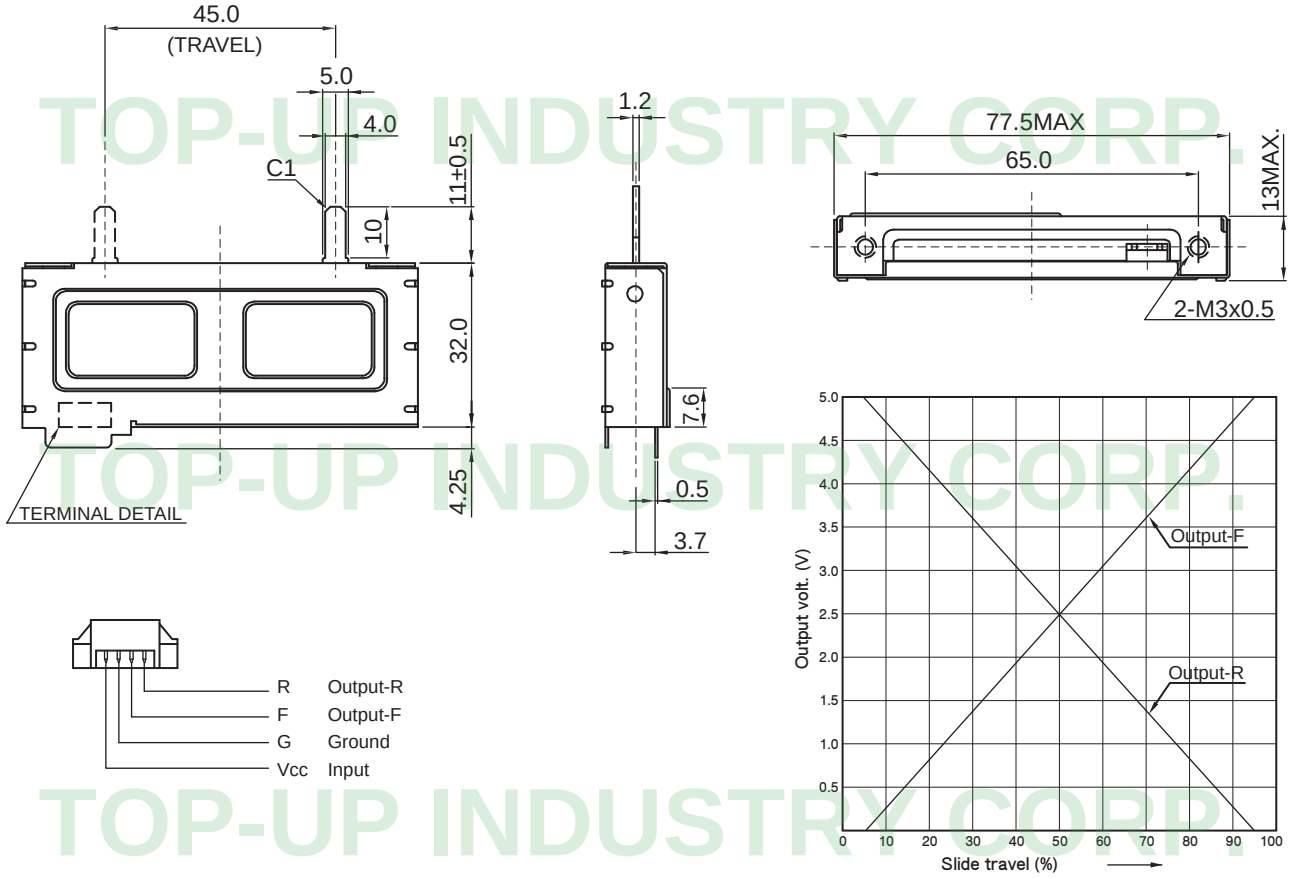

TOP-UP INDUSTRY CORP.

MD□AM/MR□RF Series Code Explanation

MD	100	AM	2	B	C	-	D	-	9-2	M	8.2	-	A	10K	-	□□□
1	2	3	4	5	6		7		8	9	10		11	12		13

1. MD — With Moter Driven MR — With Moter Driven And Rail

2. Travel of Sliding(60 , 100mm are available)

3. Product Lines of AM/RF

4. Number fo Unit

   1 — Single Unit

   2 — Dual Unit

5. Snap-in Frame

	Blank - Without Frame
	B - With Frame

6. With Connector

7. Type of Terminal "D" - P.C.B Type

D (Printed Wiring Terminal)
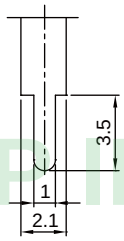

8. Slide Lever Type

Lever -Type	9-2
Dimensions	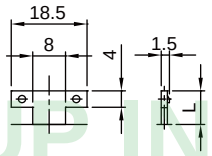
Length (L)	8.2

9. Lever Material : " M " - Metal Lever

10. Lever Length " L "

11.Type of Taper (See Taper Chart Page 220)

12. Resistance Value

13. Serial No.

TOP-UP INDUSTRY CORP.

The drawing and specification are for reference only. For further detail, please contact Top-Up head office.

MD60AM1B-D	MD100AM1B-D
Outline Drawing	Features individual specifications

MD60AM1B-D

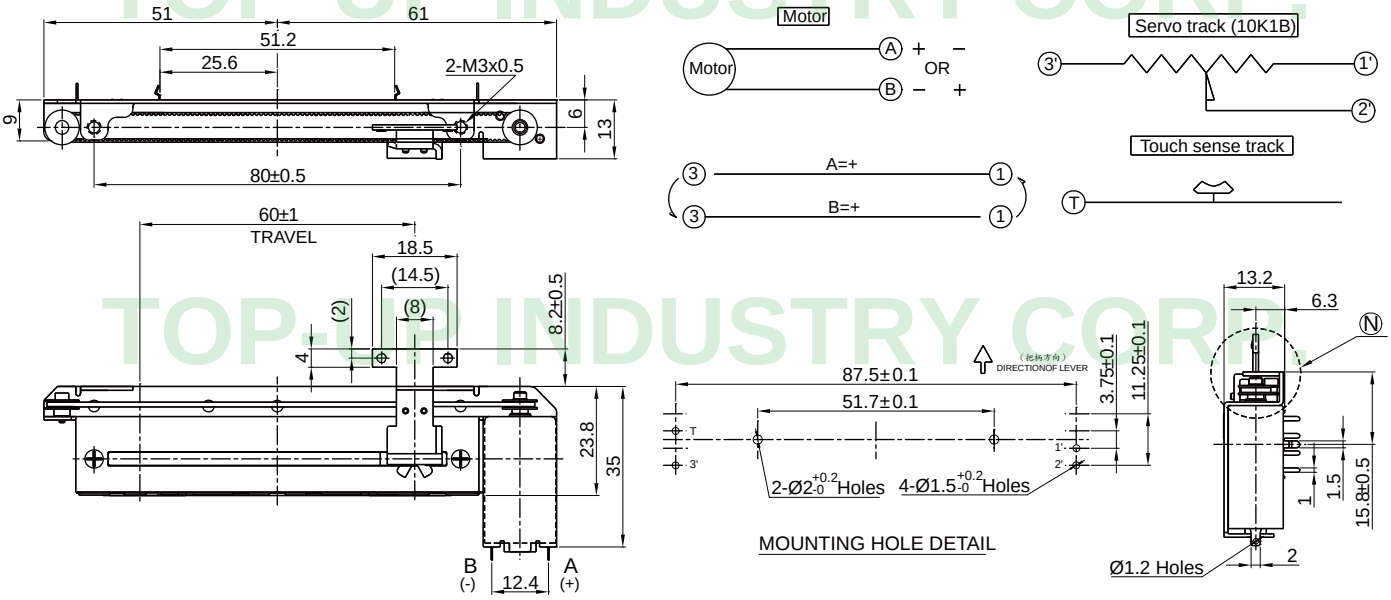

MD100AM1B-D

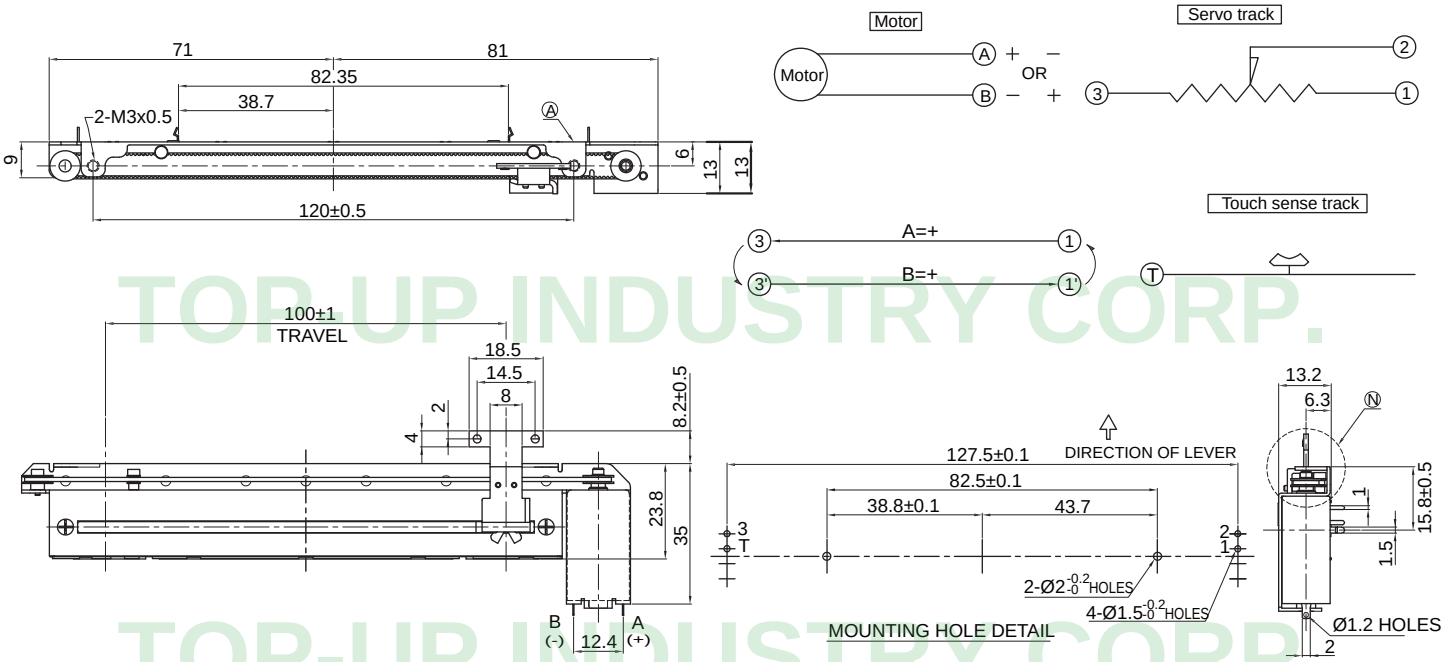

TOP-UP INDUSTRY CORP.

MD60AM2B-D / MR60RF2B-D

MD100AM2B-D / MR100RF2B-D

Outline Drawing

Features individual specifications

MD60AM2B-D / MR60RF2B-D

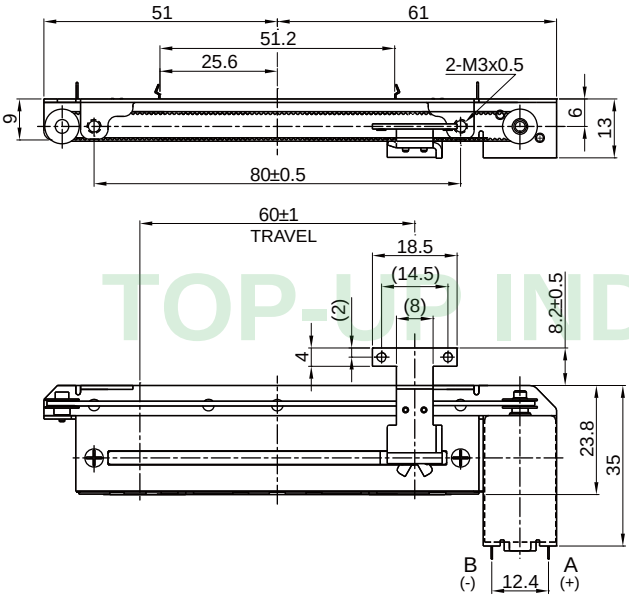

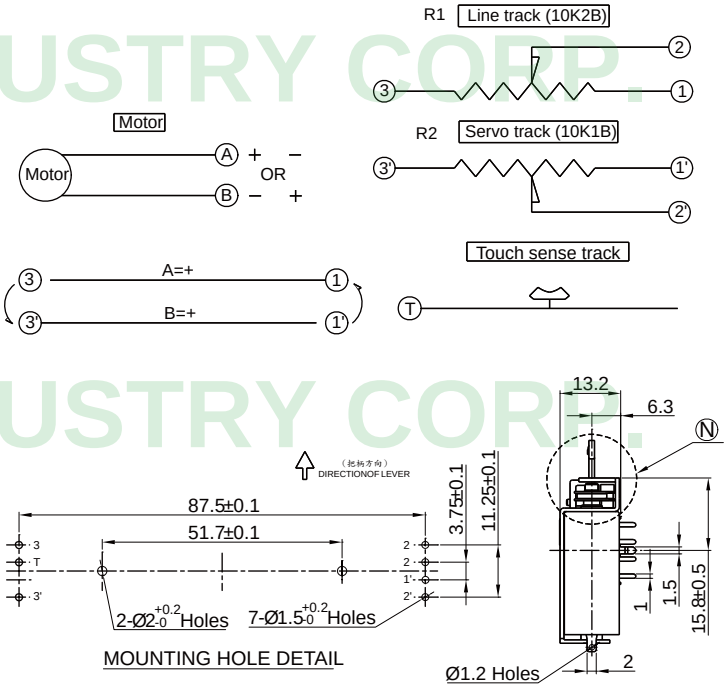

MD100AM1B-D / MR100RF2B-D

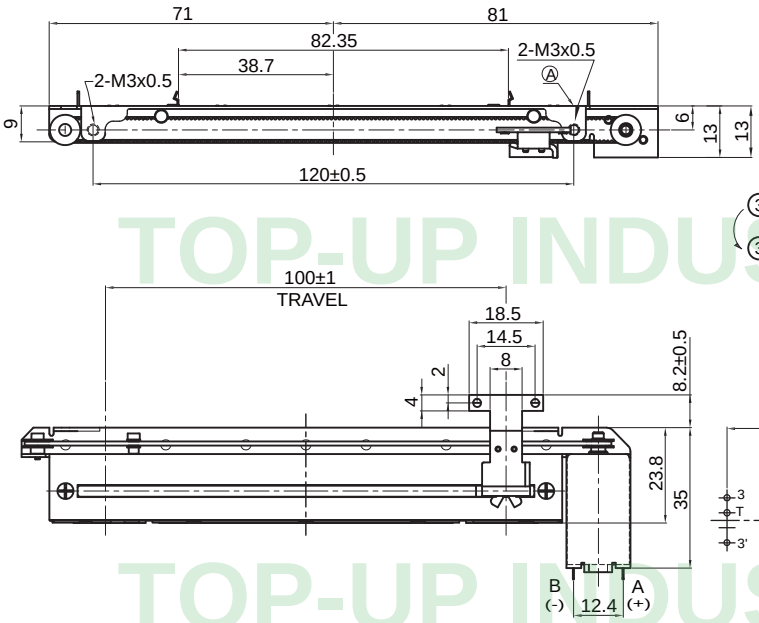

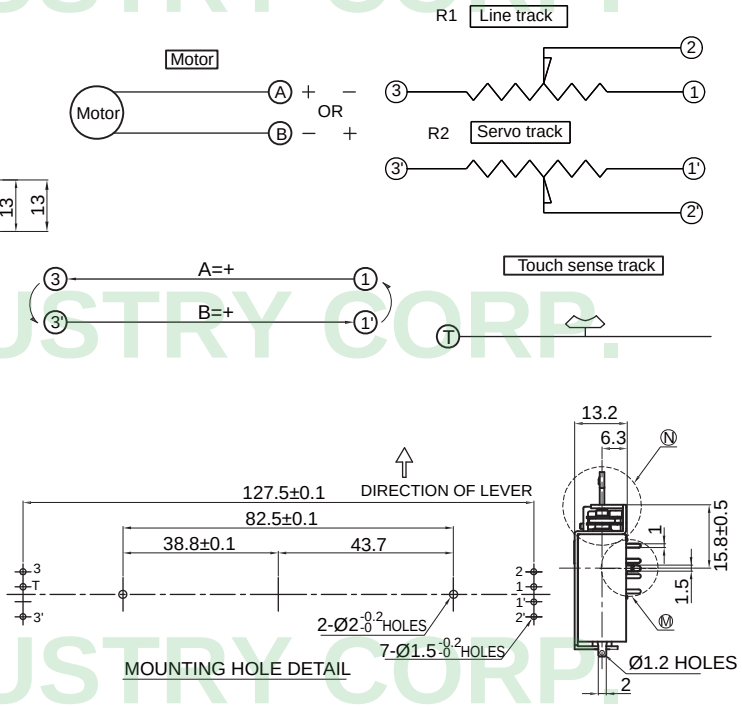

TOP-UP INDUSTRY CORP.

The drawing and specification are for reference only. For further detail, please contact Top-Up head office.

MD60AM2C-D / MR60RF2C-D

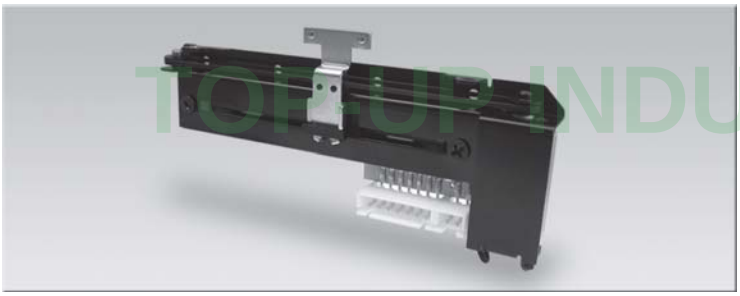

MD100AM2C-D / MR100RF2C-D

Outline Drawing

Features individual specifications

MD60AM2C-D / MR60RF2C-D

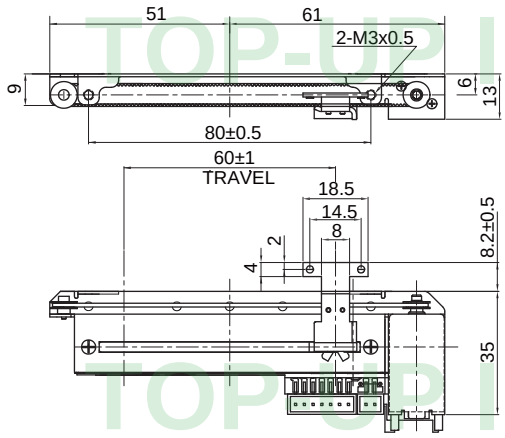

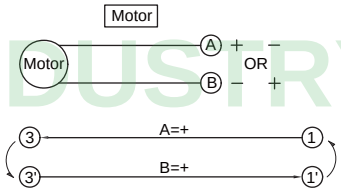

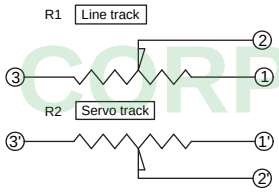

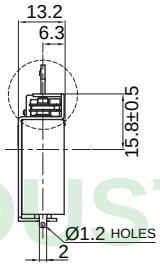

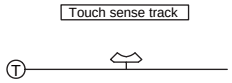

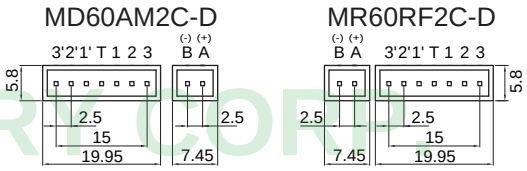

MD100AM2C-D / MR100RF2C-D

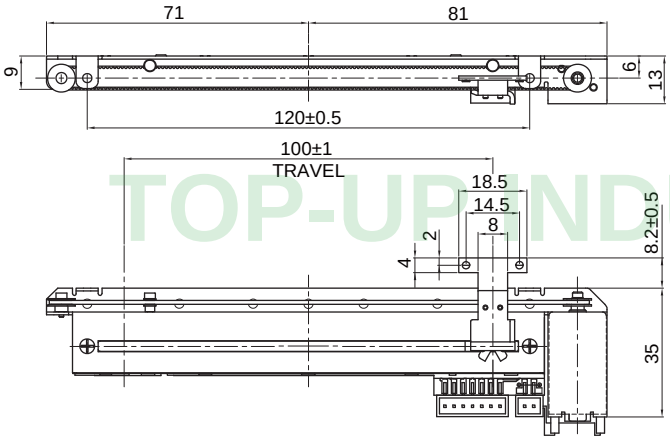

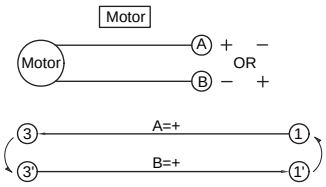

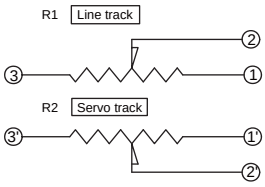

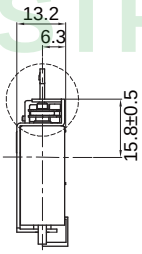

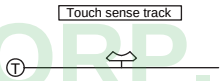

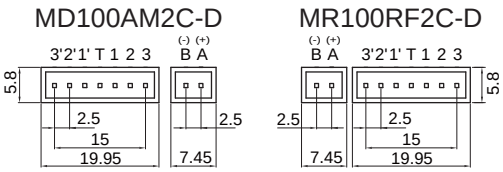

Characteristics	Specification
Operating temperature range	-10°C to +55°C
Operating force	30 ~ 130 gf
Stopper strength	5 Kgf / 10 sec
Lever push-pull strength	5 Kgf / 10 sec
Lever wobble (mm)	2 (2xL/25) (Both sides)
Lever deviation (mm)	0.5 max. (One side)
Solder heat resistance	Lower than 260°C for less than 5 seconds
Total resistance (KΩ)	5、10、20、50、100、250、500
Total resistance tolerance	±20%
Resistance taper	A,B,C
Insulation resistance	100MΩ min. 250V DC
Voltage proof	1 minute 250V AC
Sliding service life	15,000 cycles
Rated voltage	10V D.C
Maximum current	400～800mA

TOP-UP INDUSTRY CORP.

AT Series Code Explanation

AT10P	H	F	-	B	-	16	S	R	G	-	3.5	Y	-	20	-	□□□
1	2	3		4		5	6	7	8		9	10		11		12

1. Product Lines (AT10P— Insulated Shaft , 10mm Size Rotary Attenuators)
4. Horizontal (H) Type or Vertical (V) Type
3. Type of Frame: "F" , "ZF" , "NF" , "YF"

Horizontal			Vertical	
F - Type	ZF - Type	NF - Type	F - Type	YF - Type
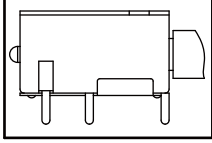	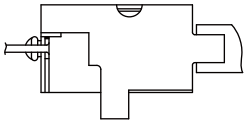	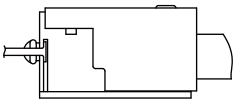	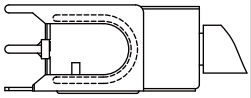	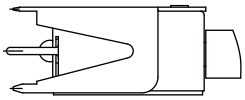

4. Type of Terminal

Horizontal		Vertical
B	B1	D
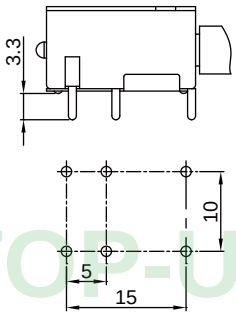	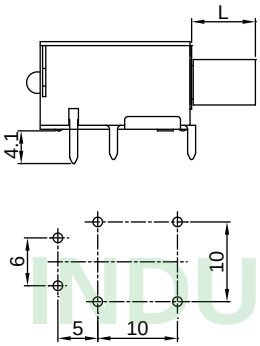	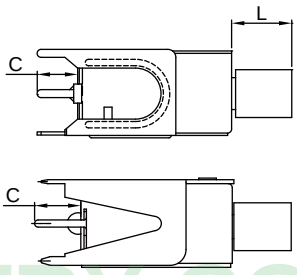

Terminal	D	D1	D2	D3
C	5.0	9.0	26	5.8

5. Shaft Length "L"
6. Type of Shaft

S - Type						SA - Type		K - Type			K1 - Type		
		S		S1	S2								
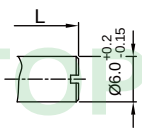		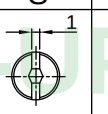		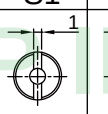	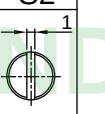	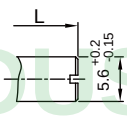		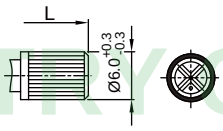			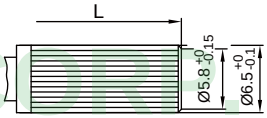		
L	3	8	9	16	24	L	8	L	9		L	11	16

7. Shaft Color (R -Red, Y -Yellow, U -Blue and B -Black are available)
8. Case Color (B -Black; G -Green; U -Blue are available)
9. Total Rotation Turns: 3.5 turns ; 4 turns ; 6 turns
10. Endless (Y) ; Non-Endless (N)
11. dB: 20 - Standard Type (Other Type: 10 dB ; 15 dB ; 22dB ; 25 dB)
12. Series No.

The drawing and specification are for reference only. For further detail, please contact Top-Up head office.

AT8PHF-B1	AT8PVYF-D	AT10PHF-B1	AT10PVYF-D

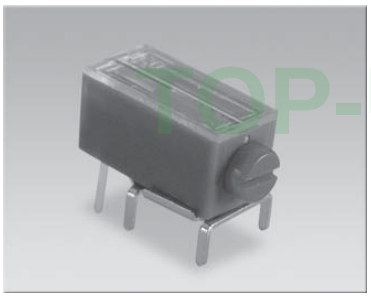
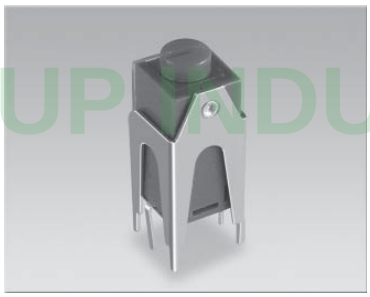
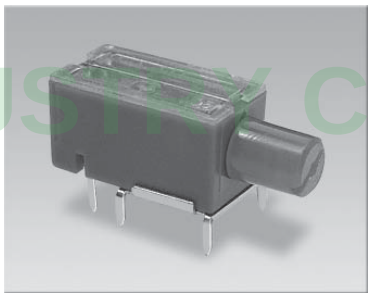
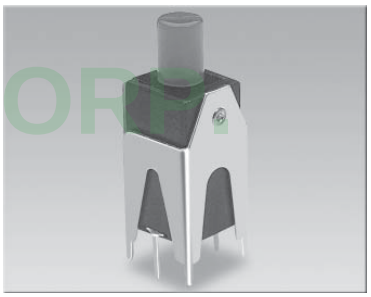

Outline Drawing | Features individual specifications

AT8PHF-B1

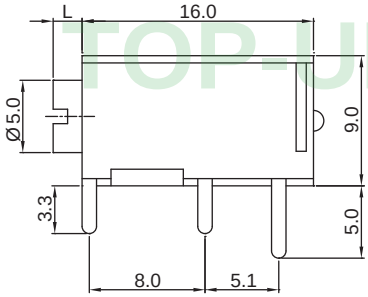

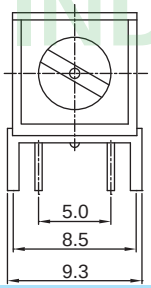

LENGTH OF SHAFT:

CODE	2S	5S
L	2	5

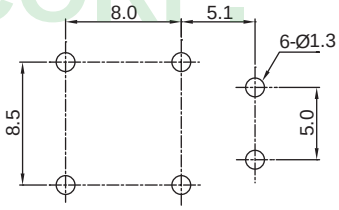

AT8PVYF-D

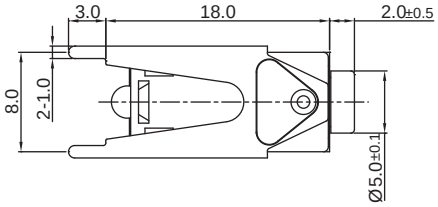

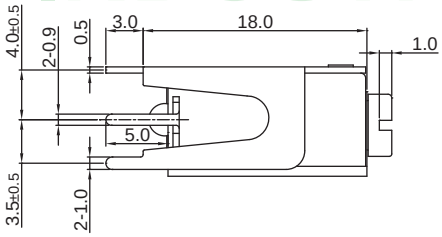

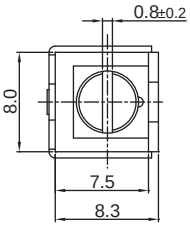

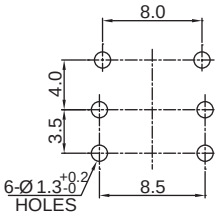

P.W.B MOUNTING DETAIL

AT10PHF-B1

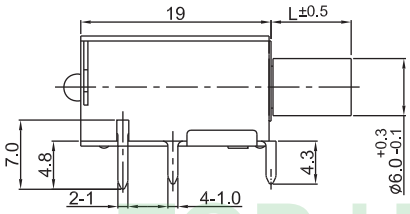

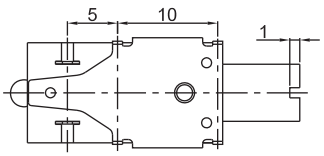

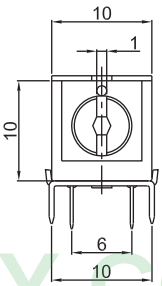

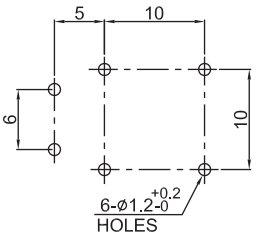

P.W.B MOUNTING DETAIL

AT10PVYF-D

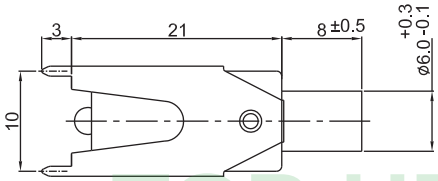

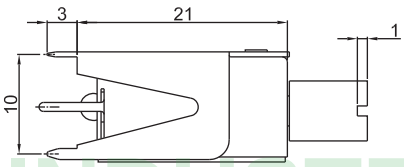

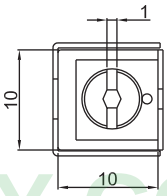

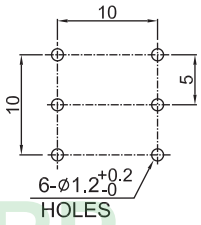

P.W.B MOUNTING DETAIL

TOP-UP INDUSTRY CORP.

AT10PVF-D2	AT10PHZF-D2	AT10PHNF-D2

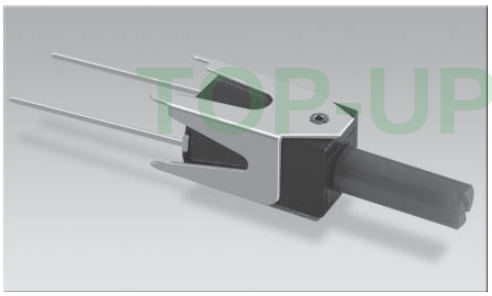
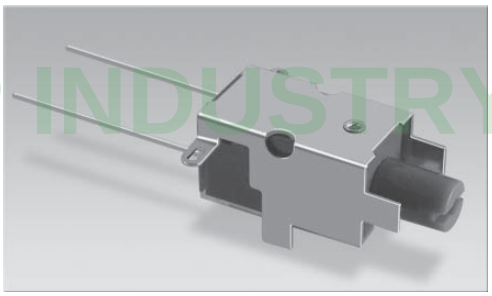
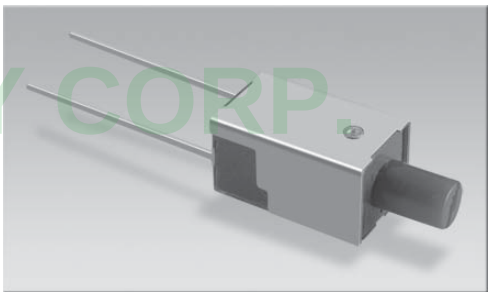

Outline Drawing | Features individual specifications

AT10PVF-D2

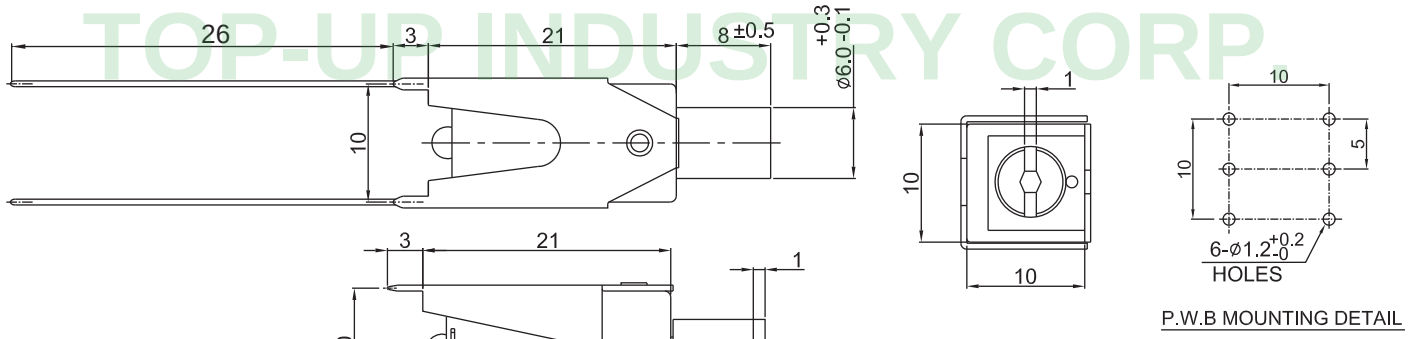

AT10PHZF-D2

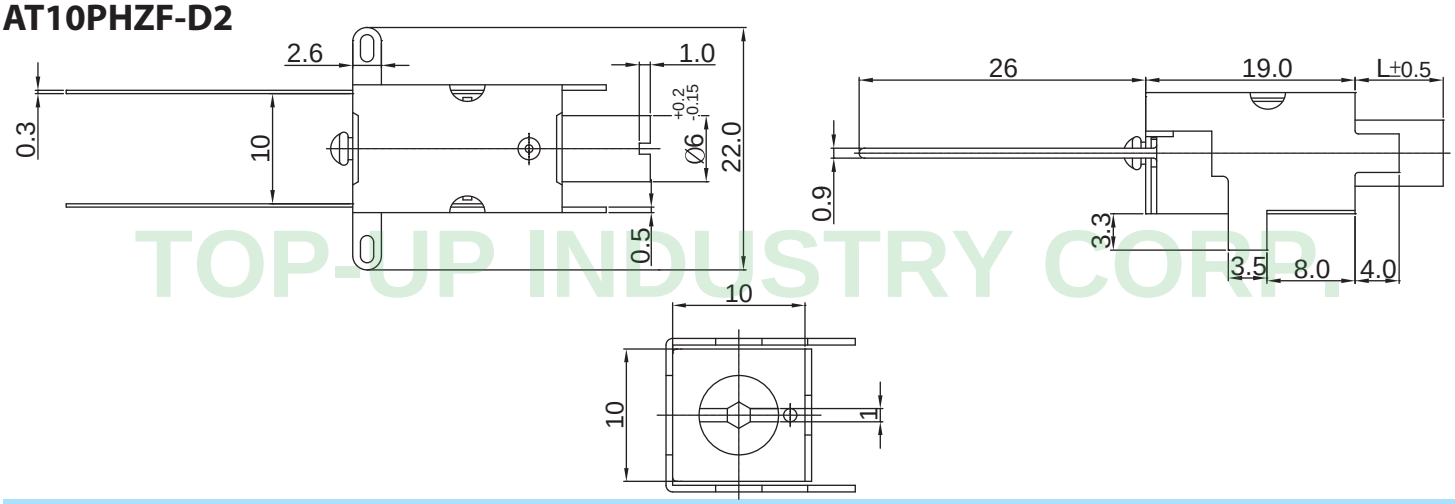

AT10PHNF-D2

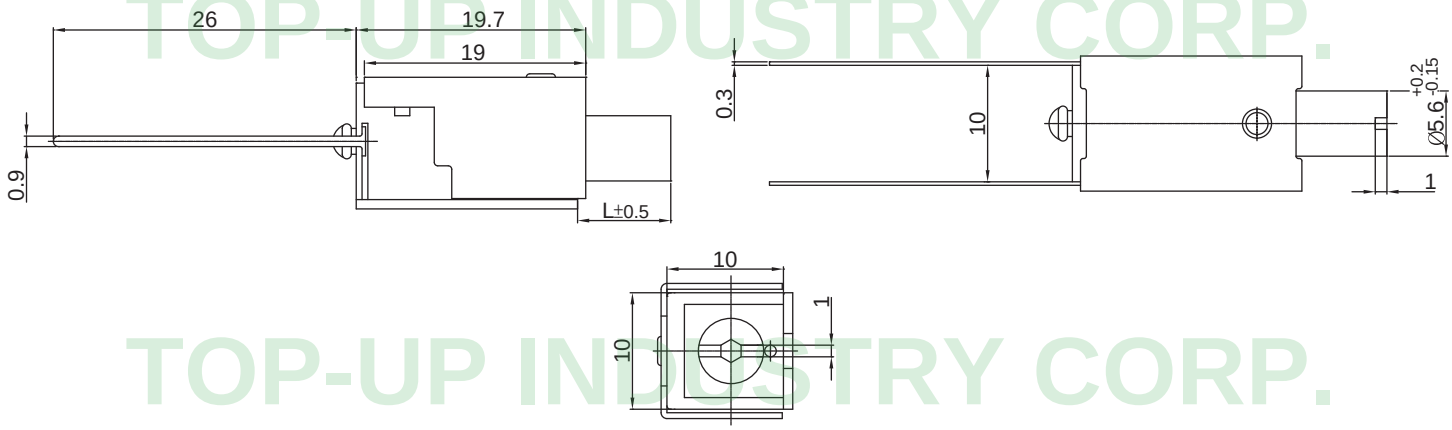

TOP-UP INDUSTRY CORP.

The drawing and specification are for reference only. For further detail, please contact Top-Up head office.

FAT-A	FAT-B	FAT-C

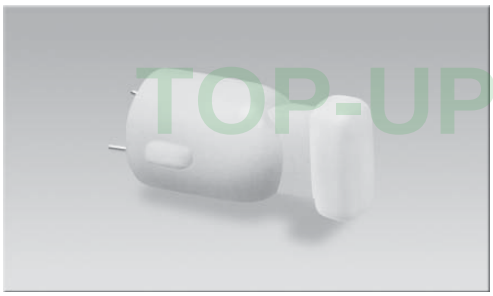
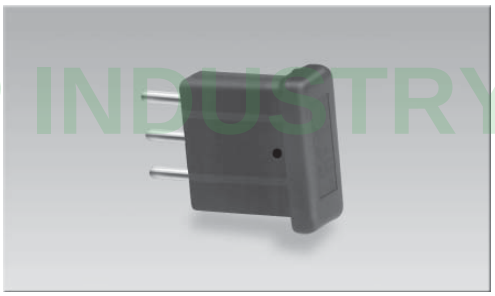
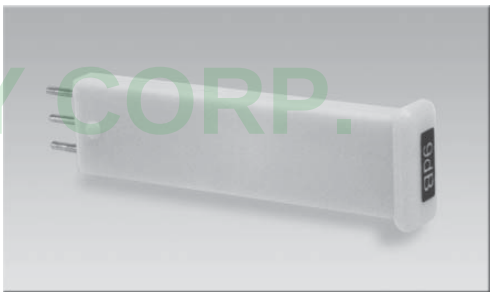

Outline Drawing | Features individual specifications

FAT-A

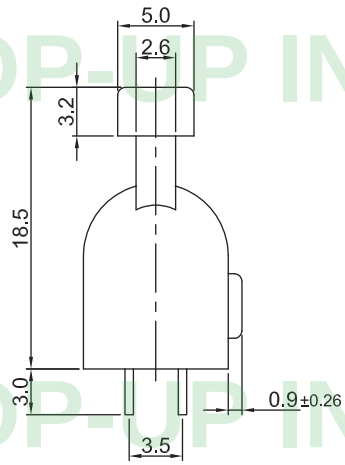

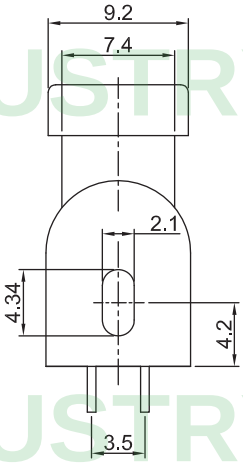

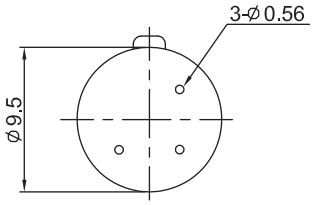

FAT-B

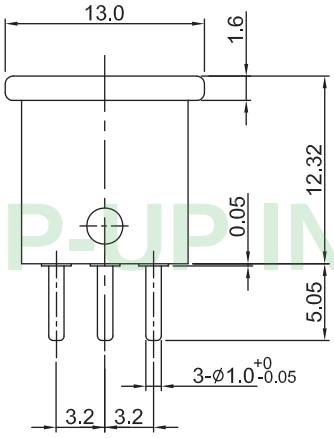

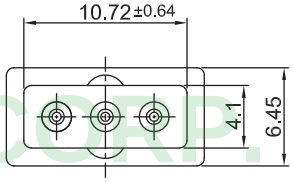

FAT-C

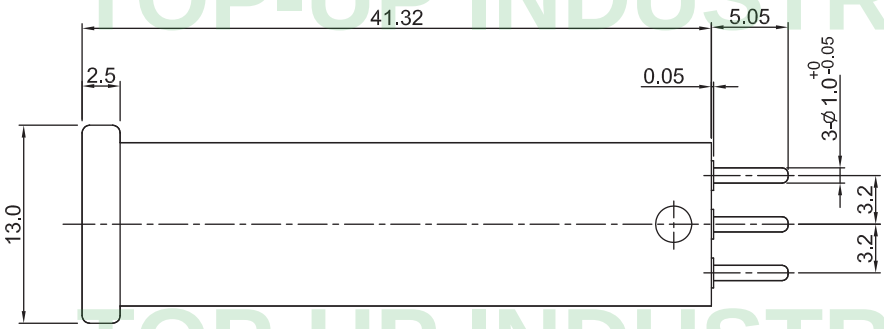

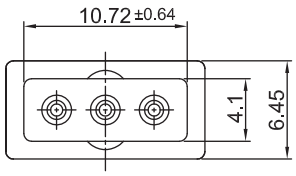

TOP-UP INDUSTRY CORP.

AT Series Code Explanation

AT 40M 1 H □ B - A - 20 K - 2/15 - □C □□□

1 2 3 4 5 6 7 8 9 10 11 12

1. Product Lines of AT Series (AT — Wire Wound Attenuators)
2. Series 40M — Metal Shaft, 40mm Size Series Wire Wound Attenuators
   50M — Metal Shaft, 50mm Size Series Wire Wound Attenuators
   60M — Metal Shaft, 60mm Size Series Wire Wound Attenuators
3. Number of Unit : 1 - Single Unit , 2-Dual Unit
4. Horizontal (H) Type or Vertical (V) Type
5. Bushing Length
6. Bushing Type

	Model	AT40M Series	AT50M Series	AT60M Series
Single Unit	B (Standard)	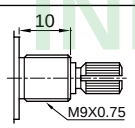	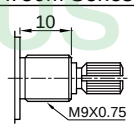	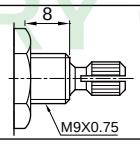
Dual Unit	B (Standard)	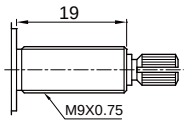	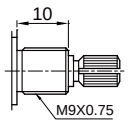	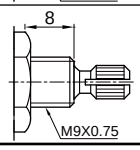

7. Type of Terminal

Horizontal		Horizontal	
A (Solder Lug Type)	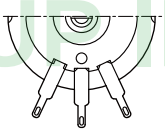	A (Solder Lug Type)	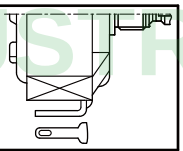

8. Shaft Length
9. Type of Shaft

KT Type	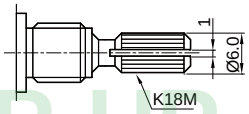

10. Attenuation / Power Rating : 2/15-2dB ,15W for more information,plese see the list as below

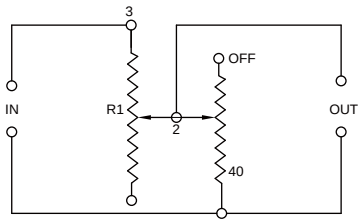

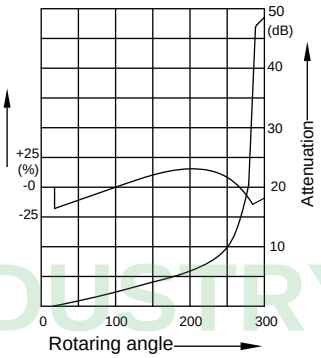

TYPE	POWER RATING
AT40M1HB-A	2 dB 15W, 6 dB/10W, 12 dB/6W
AT40M2HB-A	2 dB 12W, 6 dB/8W, 12 dB/4W
AT50M1HB-A	2 dB 30W, 6 dB/25W, 12 dB/15W
AT50M2HB-A	2 dB 25W, 6 dB/20W, 12 dB/10W
AT60M1HB-A	2 dB 50W, 6 dB/35W, 12 dB/25W
AT60M2HB-A	2 dB 40W, 6 dB/25W, 12 dB/15W

Network	L
Impedance	4Ω~8Ω
Impedance tolerance	±25%
Attenuation	0-40dB
Rotaring angle	300°±5°

11. Number of Clicks : Blank - None
12. Serial No.

TOP-UP INDUSTRY CORP.

The drawing and specification are for reference only. For further detail, please contact Top-Up head office.

AT40M1HB-A	AT50M1HB-A	AT60M1H10B-A

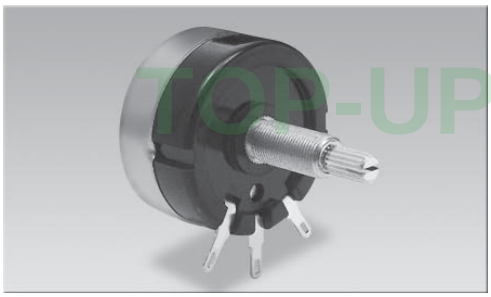
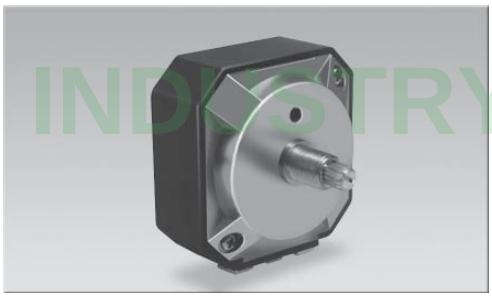
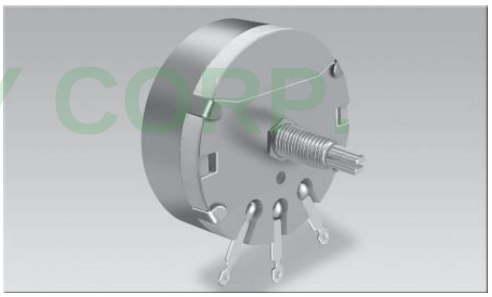

Outline Drawing | Features individual specifications

AT40M1HB-A

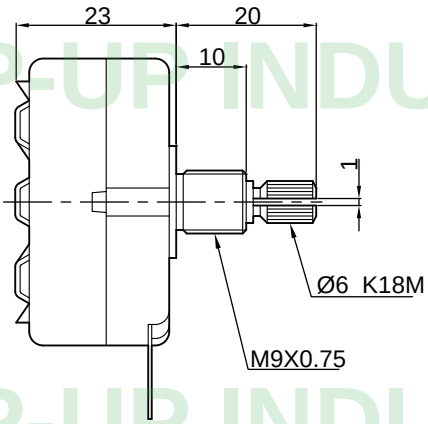

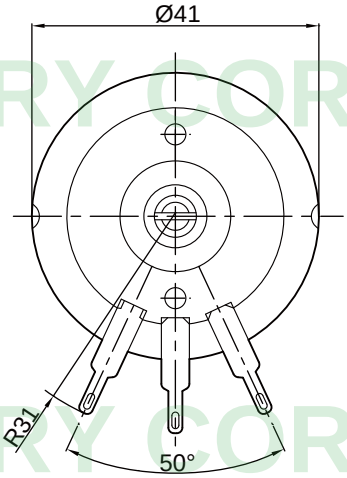

AT50M1HB-A

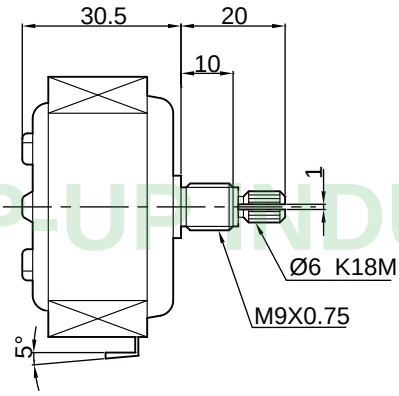

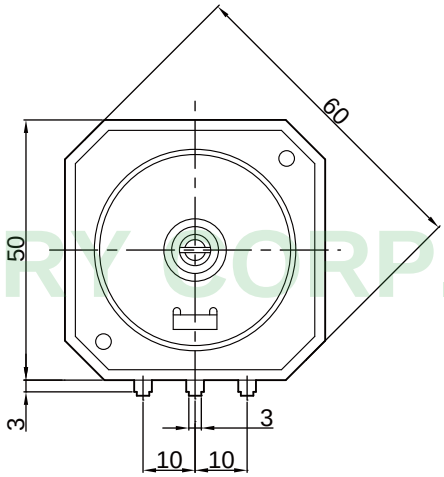

AT60M1H10B-A

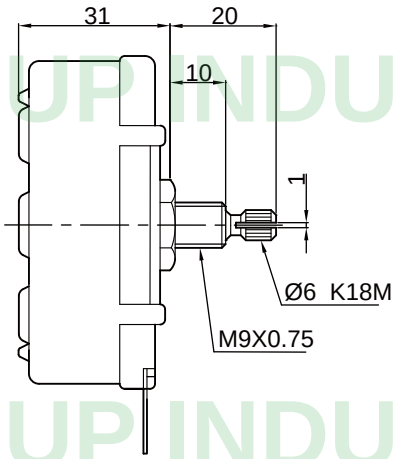

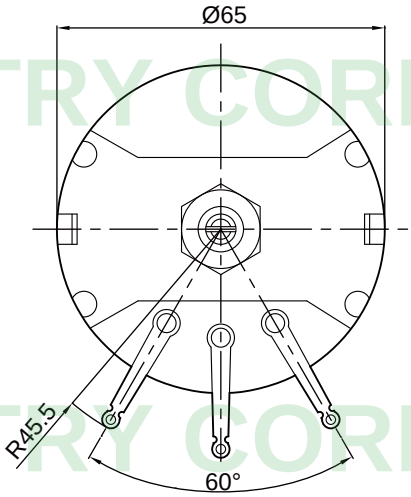

TOP-UP INDUSTRY CORP.

AT40M2HB-A	AT50M2HB-A	AT60M2H10B-A

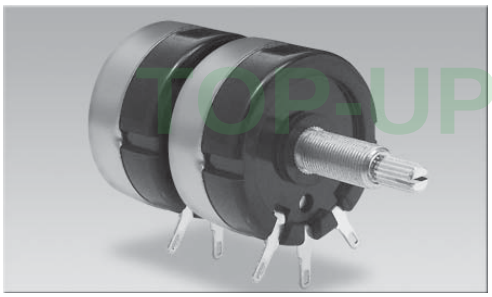
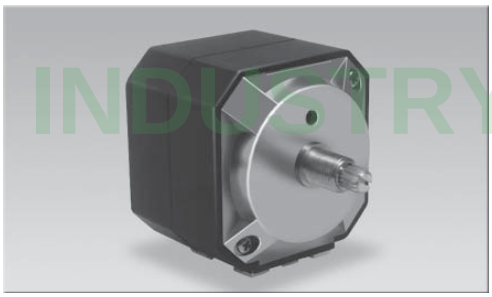
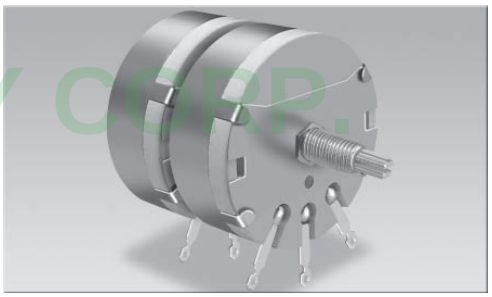

Outline Drawing | Features individual specifications

AT40M2HB-A

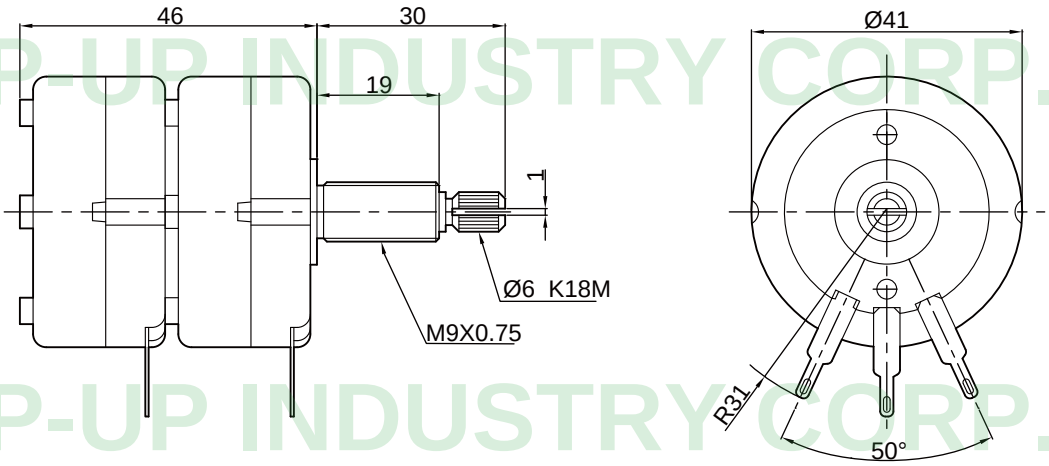

AT50M2HB-A

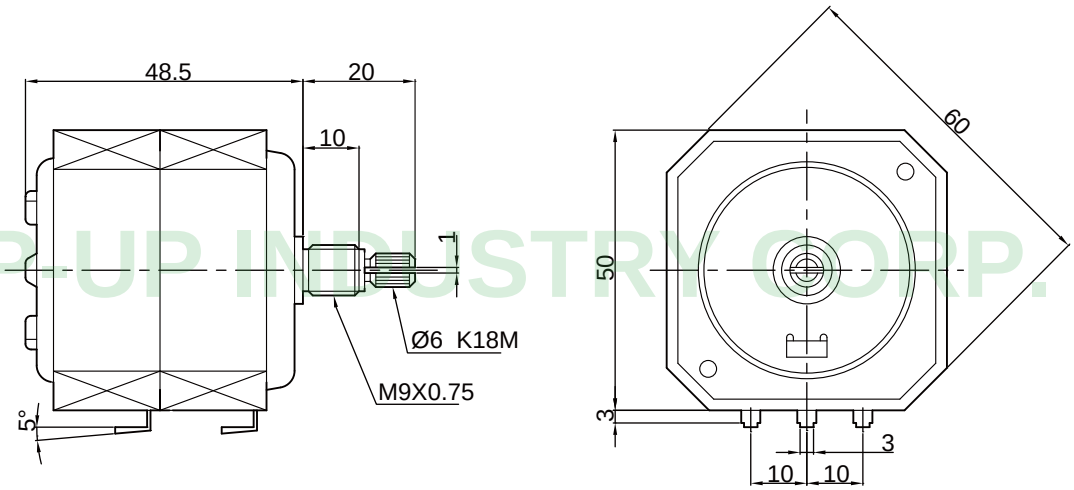

AT60M2H10B-A

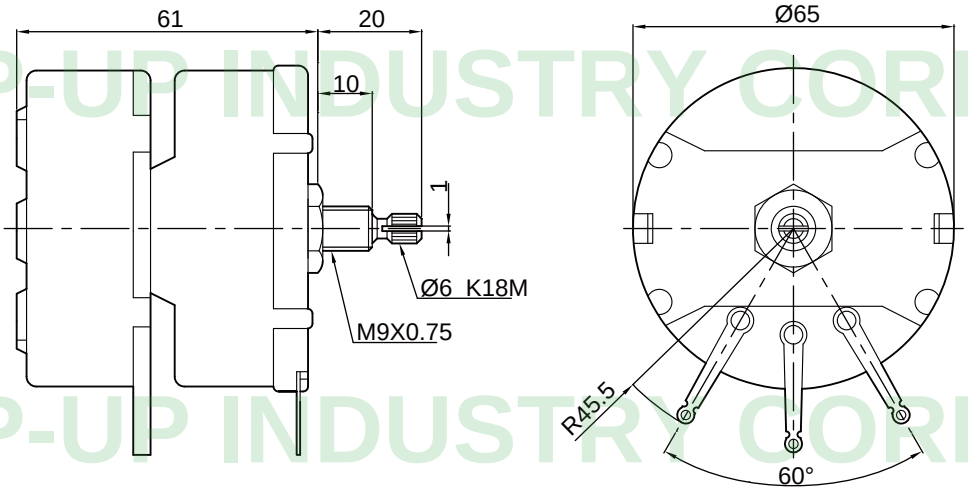

TOP-UP INDUSTRY CORP.

The drawing and specification are for reference only. For further detail, please contact Top-Up head office.

TOP-UP INDUSTRY CORP.

www.globalsources.com/topup.co

www.top-up.com.tw

8F, NO.189, YUNG AN RD.,TAOYUAN TAIWAN, R.O.C.

:886-3-3380787 (REP.)

:886-3-3380767

E-mail :sales@top-up.com.tw

skype top-up.1