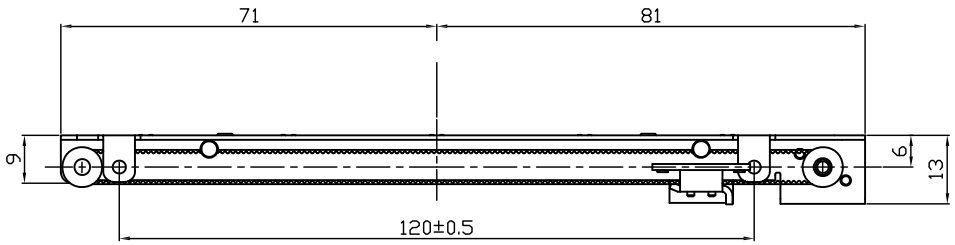

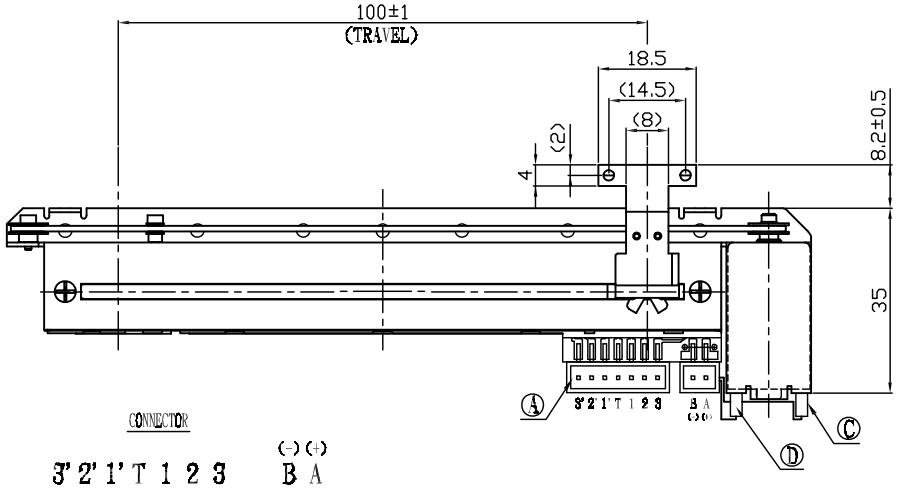

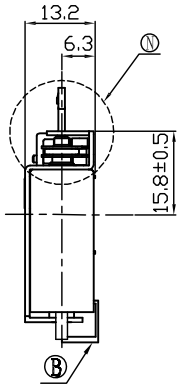

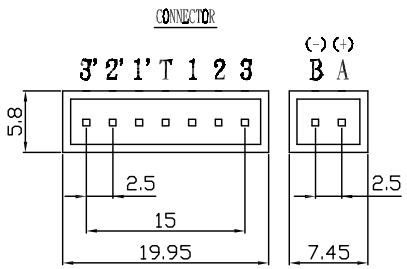

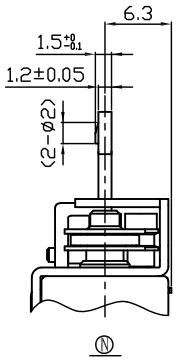

Circuit diagram

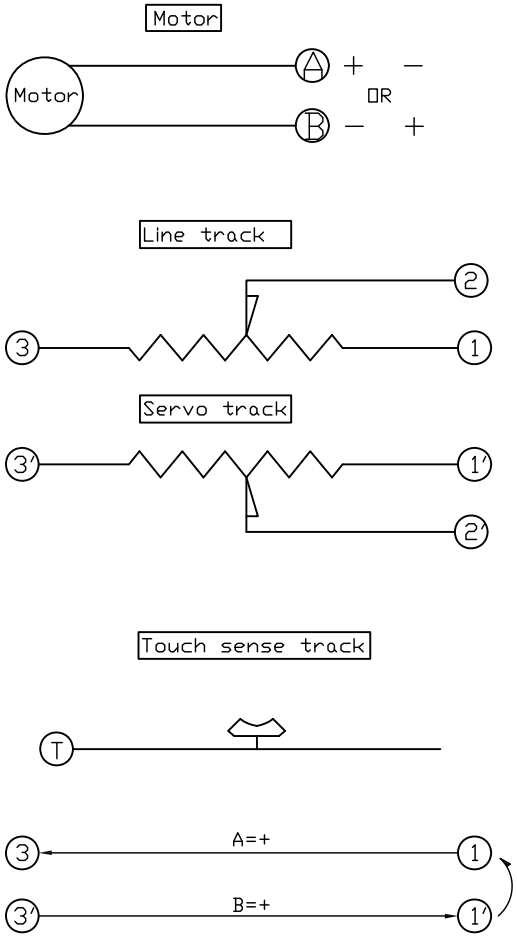

ITEM	DESCRIPTION	SPEC	NOTES
A	CONNECTOR	2-POLES PITCH 2.5mm, 7-POLES PITCH 2.5mm	JST XH HEADER
B	CABLE	UL 1007 AWG 26	——
C	SHRINK-TUBE	F32 (BLACK)	φ2.5x7mmx2(PCS)
D	LEAD-FREE SOLDER	M705	——

NOTE:
1. MOUNTING SCREW THREAD LENGTH IS CHASSIS THICKNESS +3mm MAX.
2. WITHIN 25mm FROM P-P INCLUDED KNOB'S HEIGHT.
3. THE CONNECTOR CONFORMING TO JST XH TYPE.

ROHS COMPLIANCE

CODE NO.		MODLE NAME	MD100AM2C-D-9-2M8.2- -6H
PATH :	POT\100mm\MD100AM\SPEC	DRAWING NO.	MD100AM-001

△				First Angle Projection	TOLERANCES		APPROVED SIGNATURES	DRAWN BY	CHECKED BY	APPROVED BY	SCALE	/	UNIT	m/m	VERSION	B
△					L ≦ 10	±0.3		鐘學峰	余 倩	廖智順	可正欣有限公司 TOP-UP INDUSTRY CORP.					
△2	2011.4.2	zhong xuefeng	品名更改，原：MD100AM2-D-9-2M8.2-		10 < L ≦ 100	±0.5										
△1	2008.11.18	zhong xuefeng	首次出圖		100 < L	±0.8										
					angular dimension	±5°		2011.4.2	2011.4.2	2011.4.2						