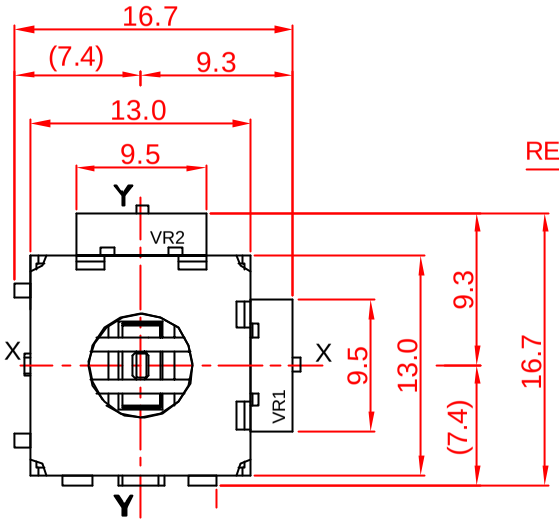

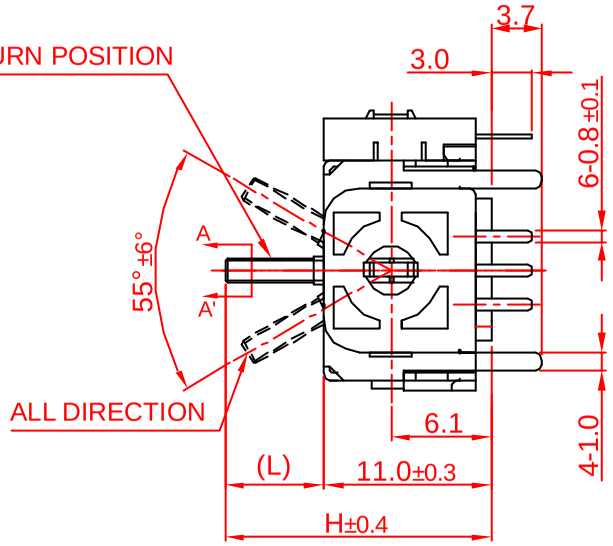

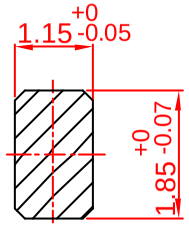

DETAIL A-A'(5/1)

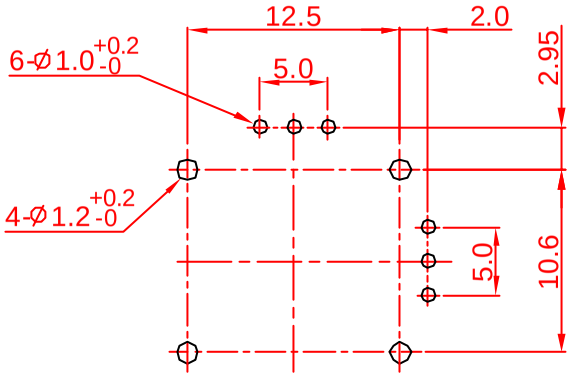

P. C. B MOUNTING HOLES DETAIL

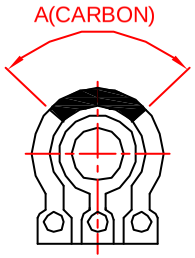

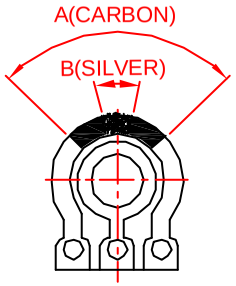

L	7.2	12
H	18.2	23

ANGLE	A	ANGLE CODE			
		30°	32°	35°	38°
		40°	45°	50°	60°

ANGLE	A	30°	32°	35°	38°	40°	45°	45°	50°	60°
	B	6°	6°	6°	6°	6°	3°	6°	6°	6°
CODE. NO.		11	37	26	3	20	7	20	5	1

RoHS Compliance

CODE NO.		MODLE NAME	JT9M-1P-□-□-□-P-□-16Y
PATH :	Other\Stick Controller\Spec	DRAWING NO.	JTM-16Y-01

TOLERANCES		APPROVED SIGNATURES	DRAWN BY	CHECKED BY	APPROVED BY	SCALE	1/1	UNIT	m/m	VERSION	A
less than 10	±0.3		鐘學峰	余 倩	鐘學峰						
10-100	±0.5										
above 100	±0.8										
angular dimension	±5°		2008.4.3	2008.4.3	2008.4.3						

△				Third Angle Projection
△				
△				
△1	2008.4.3	Zhong xue feng	首次出圖	

可正欣有限公司
TOP-UP INDUSTRY CORP.