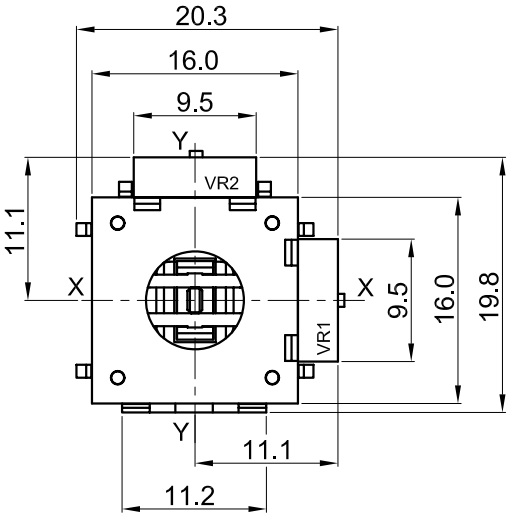

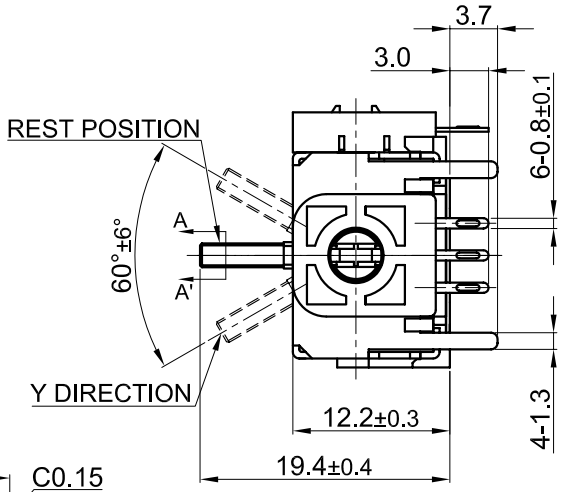

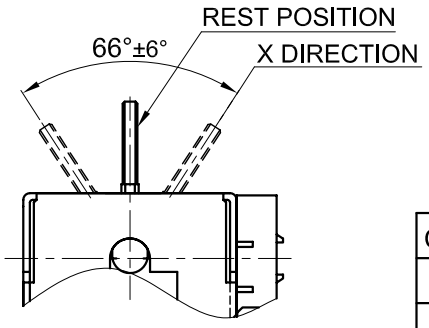

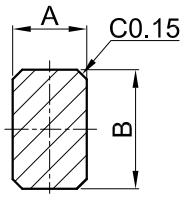

DETAIL A-A'(5/1)

Code	P
A	$1.15^{+0}_{-0.05}$
B	$1.85^{+0}_{-0.07}$

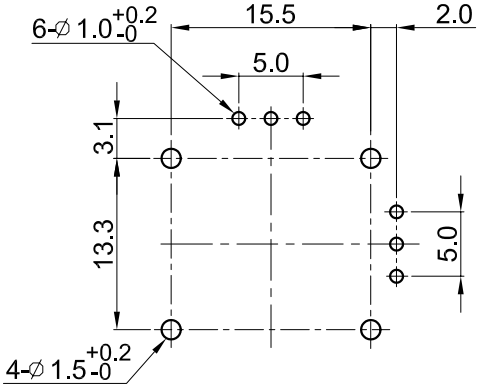

P. C. B MOUNTING HOLES DETAIL

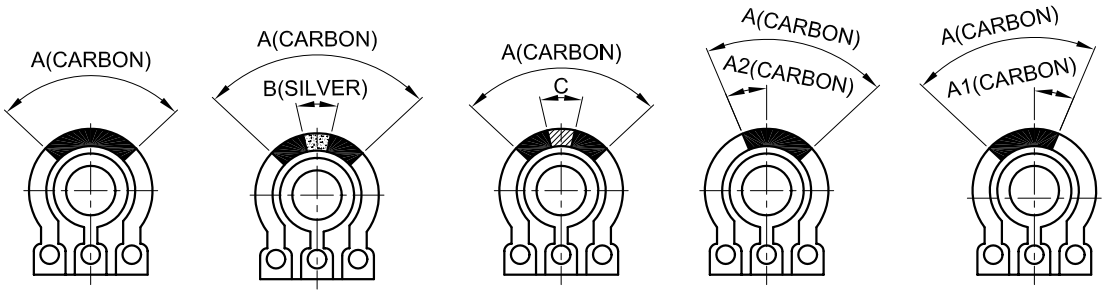

ANGLE		ANGLE CODE					
ANGLE	A	20°	25°	28°	30°	32°	33.5°
		35°	38°	40°	45°	50°	53°
		60°	65°	70°	90°	95°	120°
		147°	180°	300°			

ANGLE A	ANGLE C	CODE. NO.
35°	8°	38
45°	5°	28
40°	12°	31
45°	12°	25

ANGLE A	ANGLE C	CODE. NO.
38°	8°	27
60°	5°	29

ANGLE A	ANGLE A2	CODE. NO.
25°	6°	37
20°	3°	24
20°	0°	21
120°	40°	2

ANGLE A	ANGLE A1	CODE. NO.
25°	6°	36
20°	3°	23

ANGLE A	ANGLE B	CODE. NO.
60°	6°	1
38°	6°	3
38°	8°	4
50°	6°	5
53°	6°	6

ANGLE A	ANGLE B	CODE. NO.
45°	3°	7
32°	3°	8
53°	8°	9
45°	5°	10
30°	6°	11

ANGLE A	ANGLE B	CODE. NO.
50°	8°	12
85°	8°	13
100°	8°	14
80°	10°	15
60°	10°	16

ANGLE A	ANGLE B	CODE. NO.
25°	6°	17
50°	3°	18
45°	15°	19
40°	6°	20
25°	12°	22

ANGLE A	ANGLE B	CODE. NO.
35°	6°	26
40°	3°	30
147°	3°	32
70°	6°	33
28°	6°	34

ANGLE A	ANGLE B	CODE. NO.
35°	8°	35

RoHS Compliance

△			
△			
△			
△1	2005.11.9	盧 霞	增加碳膜形式及碳膜角度

Third Angle Projection

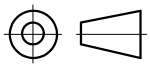

MODEL NAME:	JT9-1P-□-□-P-□-16Y
DRAWING NO.	JT-16Y-01
CODE NO.	
PATH:	Other\Stick Controller\Spec

TOLERANCES		UNIT	SCALE	APPROVED SIGNATURES	DRAWN BY	CHECKED BY	APPROVED BY
less than 10	±0.3	m/m	1 / 1		盧 霞	王文娟	周貴榮
above 10-100	±0.5	VERSION					
above 100	±0.8						
angular dimension	±5°	B			2005.11.10	2005.11.10	2005.11.10

TOP-UP INDUSTRY CORP.