Position Sensor / Encoder (15RS Series) Page

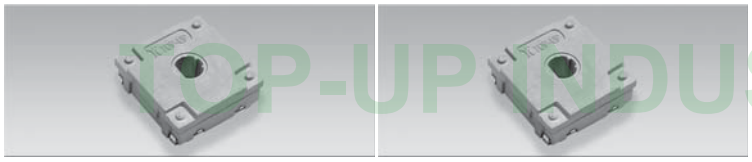

146

8mm Size Metal Shaft Encoder

147

9mm Size Metal Shaft Encoder

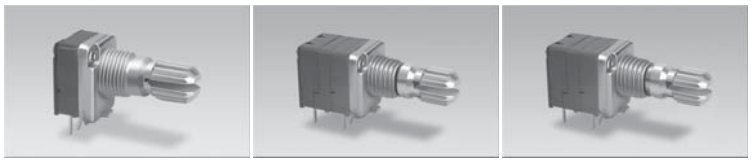

149

Rotary Encoders

151

152

11mm Size Low-Profile (General Purpose) Encoders

155

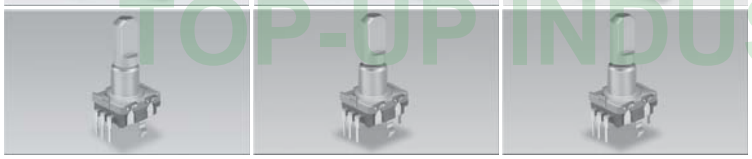

156

11mm Size Low-Profile (General Purpose) Encoders

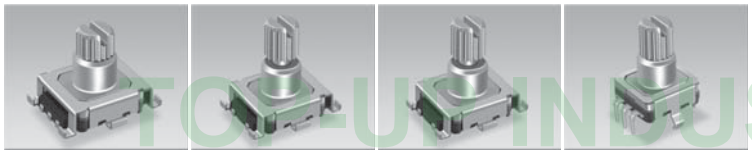

160

TOP-UP INDUSTRY CORP.

The drawing and specification are for reference only. For further detail, please contact Top-Up head office.

11mm Size Low-Profile (General Purpose) Encoders — Page

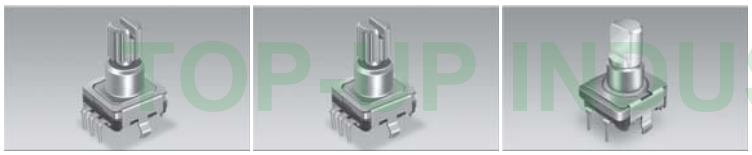

161

12mm Size Low-Profile (General Purpose) Encoders

164

165

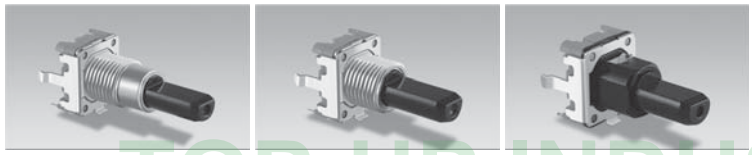

166

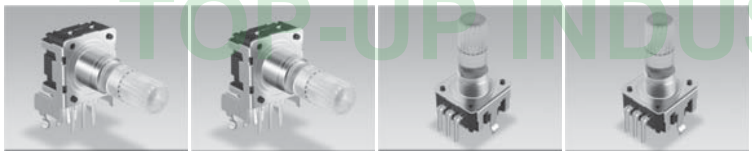

With Luminous Shaft 167

16mm Low-Profile (General Purpose) Encoders

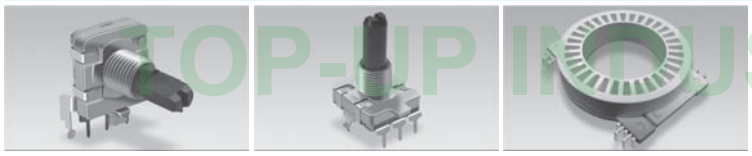

169

LED Indicator Circle

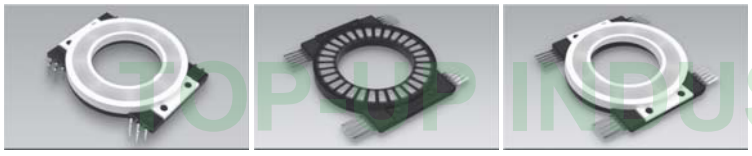

170

20mm & 23mm Size Gray Code & Hollow Shaft Encoders

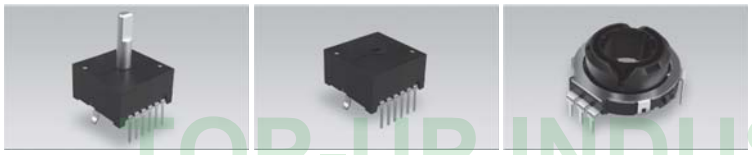

172

TOP-UP INDUSTRY CORP.

15RS-TU	EC15-SMT
Position Sensor	Encoder

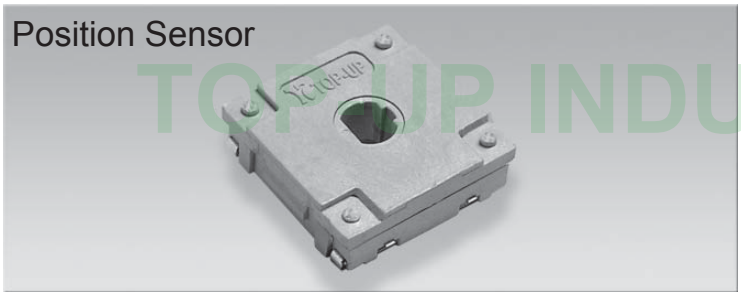

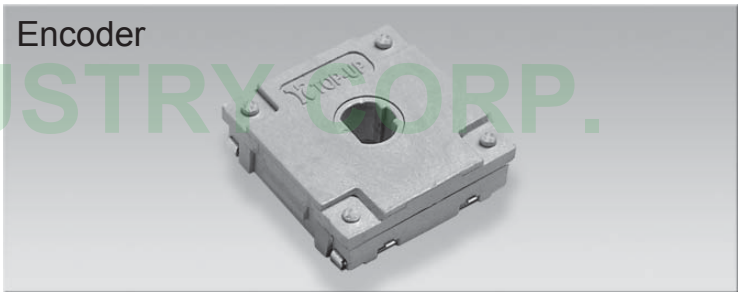

Outline Drawing	Features individual specifications

15RS-TU

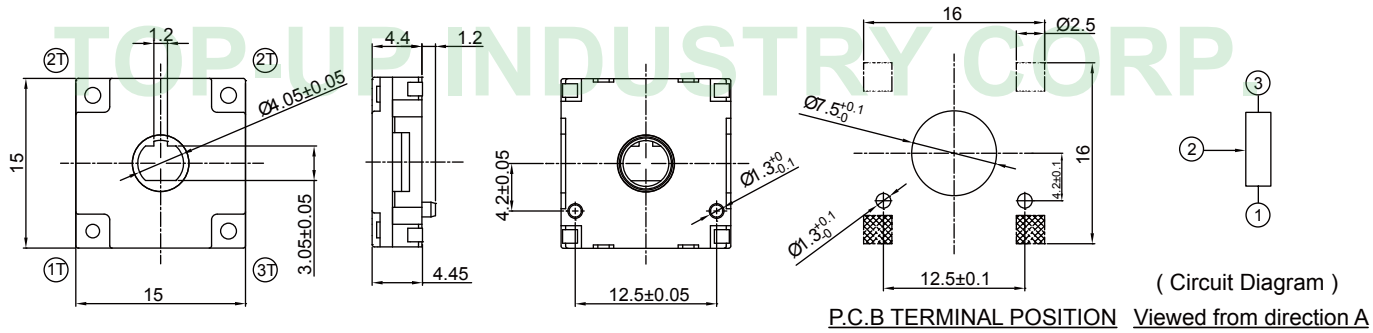

EC15-SMT

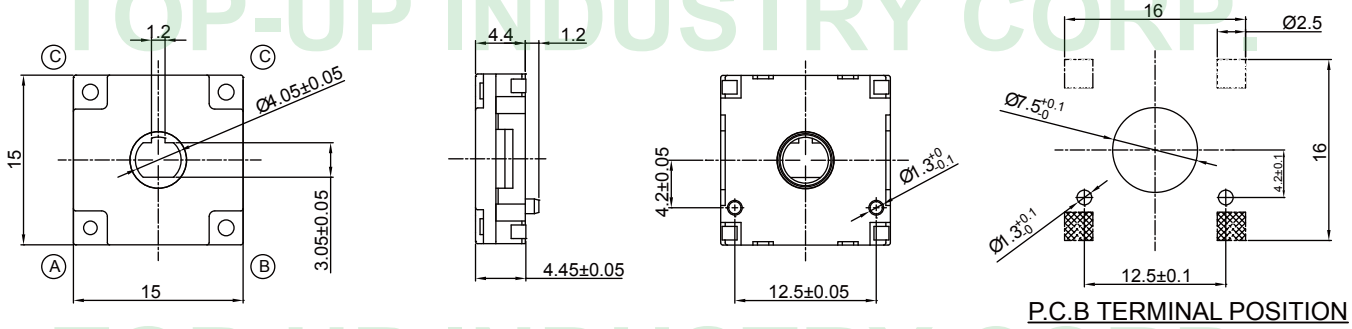

EC15 Series Encoder

Common Specifications

Items	Specifications
Pulse	3
Number of Detent	———
Phase Difference (mesc)	≧14
Chattering (msec)	≦3
Insulation Resistance	DC250V 100MΩ MIN
Dielectric Strength	50V AC 1 min
Torque (gf.cm)	40gf.cm MAX
Rotational Life (Cycle)	15,000

TOP-UP INDUSTRY CORP.

The drawing and specification are for reference only. For further detail, please contact Top-Up head office.

EC08M1H5B-B	EC08MM2H5B-B

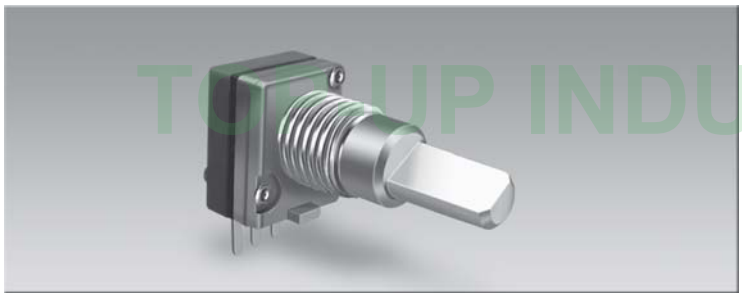

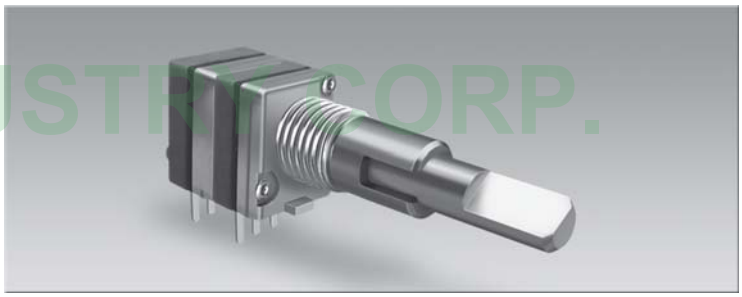

Outline Drawing	Features individual specifications

EC08M1H5B-B

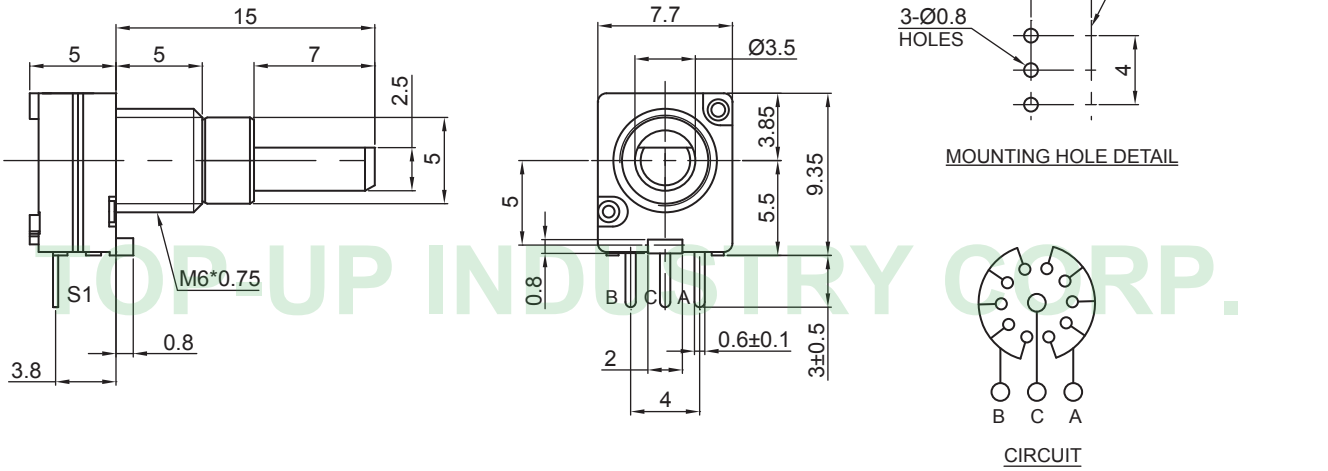

EC08MM2H5B-B

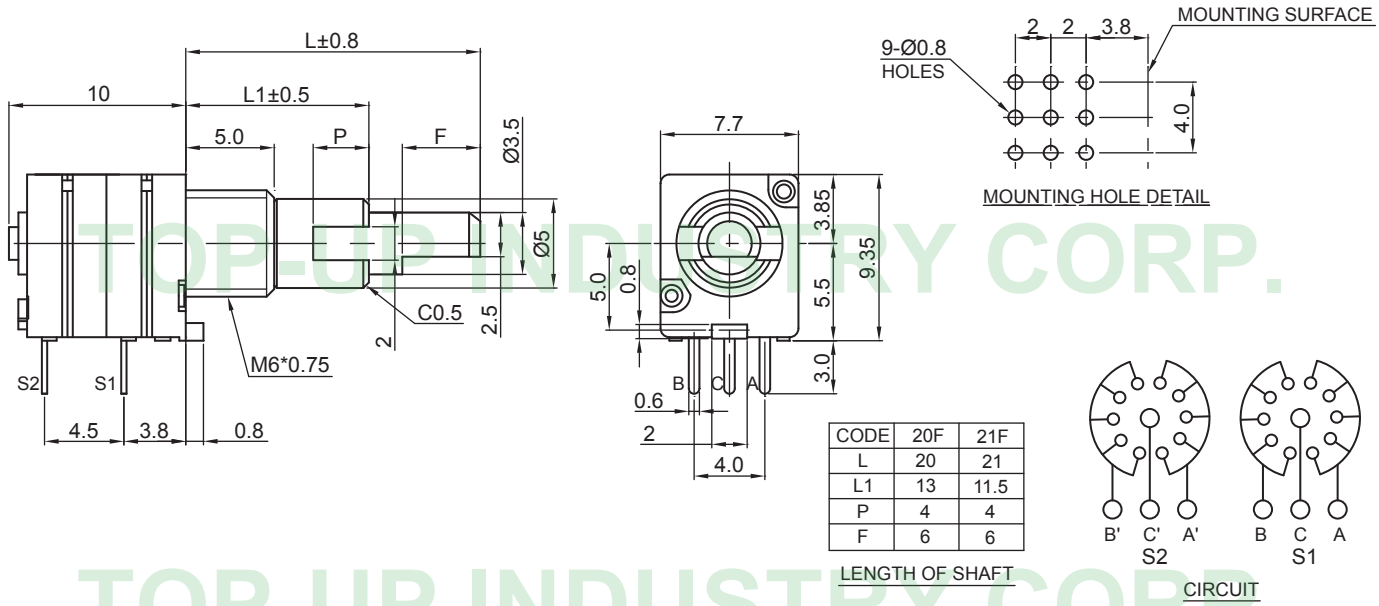

CODE	20F	21F
L	20	21
L1	13	11.5
P	4	4
F	6	6

LENGTH OF SHAFT

TOP-UP INDUSTRY CORP.

EC09M Series Code Explanation

EC09M	S	D	H	□	B	- B	- 20	K -	15 -	30C	- □□□
1	2	3	4	5	6	7	8	9	10	11	12

1. Product Lines of EC09M (9mm Metal Shaft Encoder)
2. Switch : S- With Switch; Blank- Without Switch
3. Swtich Travel

Code	D	E
Travel	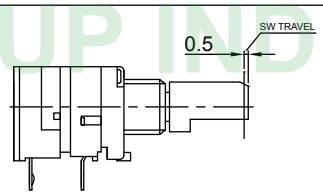	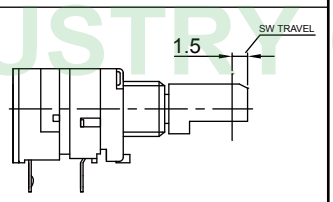

4. Horizontal Type (H)
5. Bushing Length : Blank- 7mm (Standard Type)
6. Type of Bushing

(With Screw)	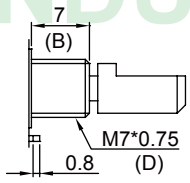			
B (Standard)				
Other type	B	5	7	10
	D	M7*0.75		

7. Type of Terminal (B - P.C.B Type)
8. Shaft Length
9. Type of Shaft

K - Type							F - Type							S- Type						
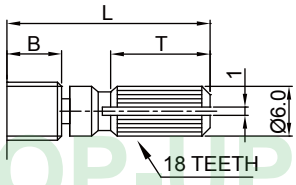							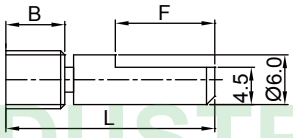							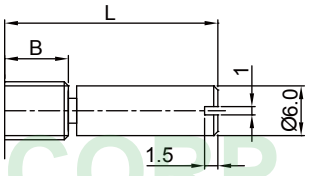						
B: 5mm		B: 7mm		B: 10mm			B: 5mm		B: 7mm		B: 10mm			B: 5mm		B: 7mm		B: 10mm		
L	15	L	20	L	25	30	L	15	L	20	L	25	30	L	15	L	20	L	25	30
T	7	T	12	T	12	12	F	7	F	12	F	12	12							

10. Output Pulse : 15 - 15Pulse

Pulse No.	12 Pulses	12 Pulses	15 Pulses
Detent NO.	12C	24C	30C

11. Number of Detent : Blank- None, 30C - 30 Detent
12. Series No.

The drawing and specification are for reference only. For further detail, please contact Top-Up head office.

EC09MHB-B	EC09MSDHB-B	EC09MSEHB-B

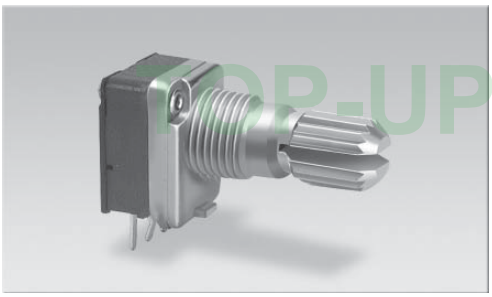
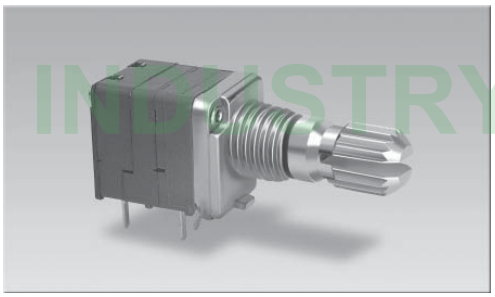
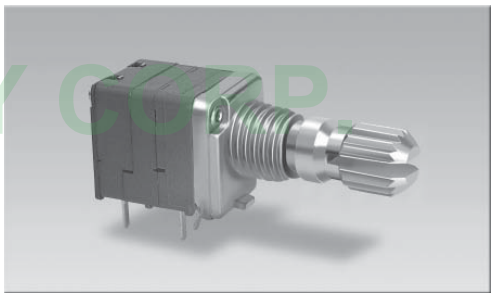

Outline Drawing | Features individual specifications

EC09MHB-B

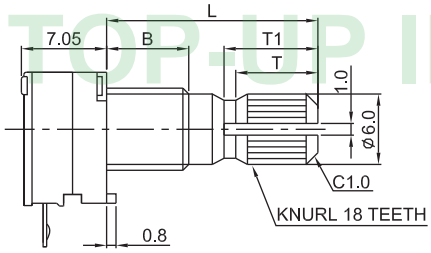

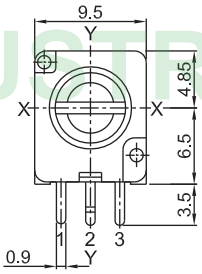

SHAFT SHOWN IN
FULL C.C.W POSITION

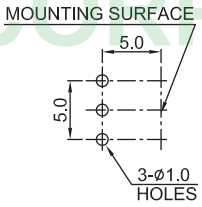

P.C.B MOUNTING HOLES DETAIL

EC09MSDHB-B

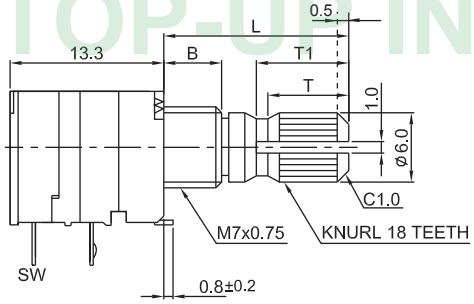

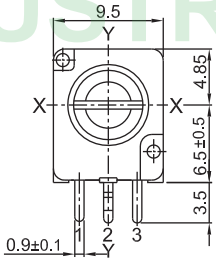

SHAFT SHOWN IN
FULL C.C.W POSITION

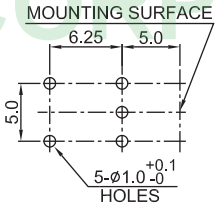

P.C.B MOUNTING DETAIL
TOLERANCES±0.1
VIEWED FROM MOUNTING SIDE

EC09MSEHB-B

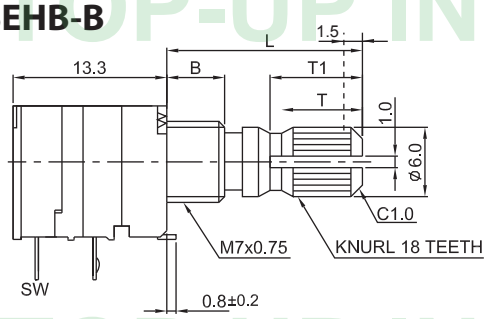

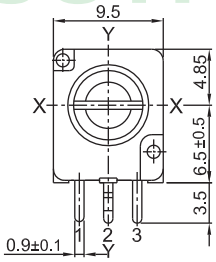

SHAFT SHOWN IN
FULL C.C.W POSITION

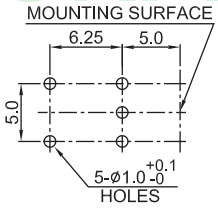

P.C.B MOUNTING DETAIL
TOLERANCES±0.1
VIEWED FROM MOUNTING SIDE

Common Specifications

Pulse	Number of detent	Phase difference (msec)	Chattering (msec)	Sliding noise (msec)	Insulation resistance	Dielectric strength	Detent torque (gf•cm)	Rotational life (cycle)
12	12	3	5	5	250V DC 100MΩ MIN	300V AC 1 min	150±80	30,000
	24	3	5	5			150±80	
15	30	3	5	5			150±50	

Switch Specifications

Rating	Contact resistance	Insulation resistance	Dielectric strength	Contact arrangement	Travel of switch (mm)	Operating force (gf)	Operating life(cycle)
DC 5V 10 mA	100mΩ	250V DC 100MΩ MIN	300V AC 1 min	PUSH ON	0.5	400+400/-200	20,000
					1.5	400+400/-200	

TOP-UP INDUSTRY CORP.

EC10mm Series Code Explanation

EC10F	H	9	F	-	B	-	16*1.6	□	-	12	-	24C	-	□□□
1	2	3	4		5		6	7		8		9		10

1. Product Lines
   EC10F— 10mm Size Rotary Encoder
   EC10J— 10mm Size With Teeth Type Rotary Encoder
2. Horizontal (H) Type or Vertical (V) Type

H	V

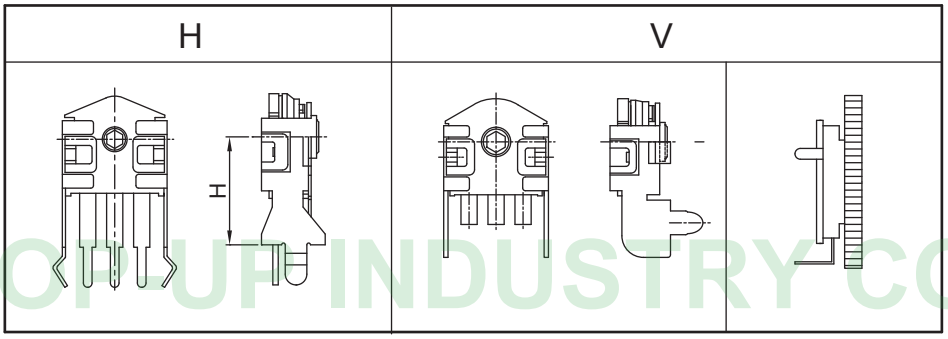

3. Mounting Height(H) : 5mm,7mm, 9mm,11mm, 13mm (only EC10FH Series)
4. With Frame: "F"
5. Type Of Terminal

P.C.B type				SMD type
	Horizontal		Vertical	SMT
	B		D	

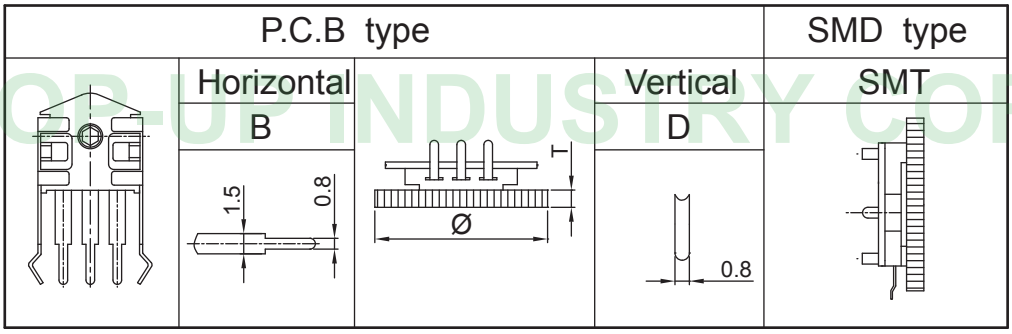

6. Shaft Diameter*Shaft Thickness (Only For EC10J Series)
7. Knob Angle (Only For EC10J Series)
8. Output Pulse: 12 - 12Pluse

Pulse NO.	12 Pulses
Detent NO.	24C

9. Number of Detent : Blank - None, 24C -24 Detent
10. Serial No.

TOP-UP INDUSTRY CORP.

The drawing and specification are for reference only. For further detail, please contact Top-Up head office.

EC10FH9F1-B	EC10FVF-D
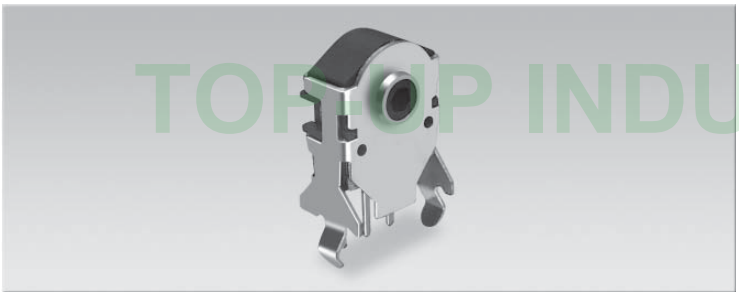	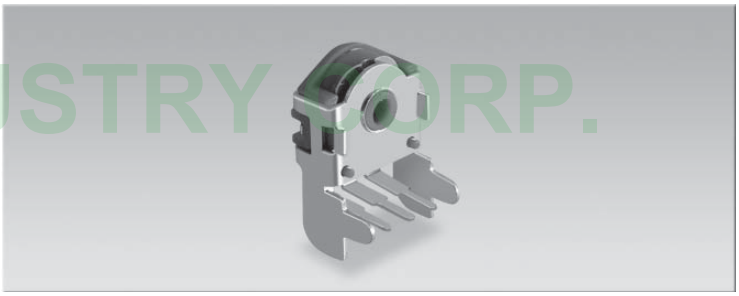
Outline Drawing	Features individual specifications

EC10FH9F1-B

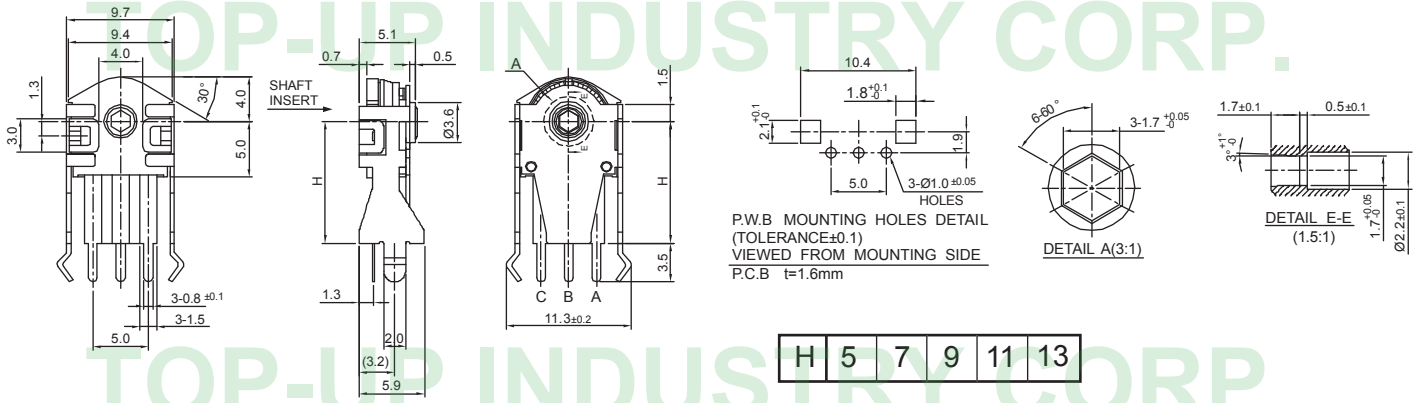

H	5	7	9	11	13

EC10FVF-D

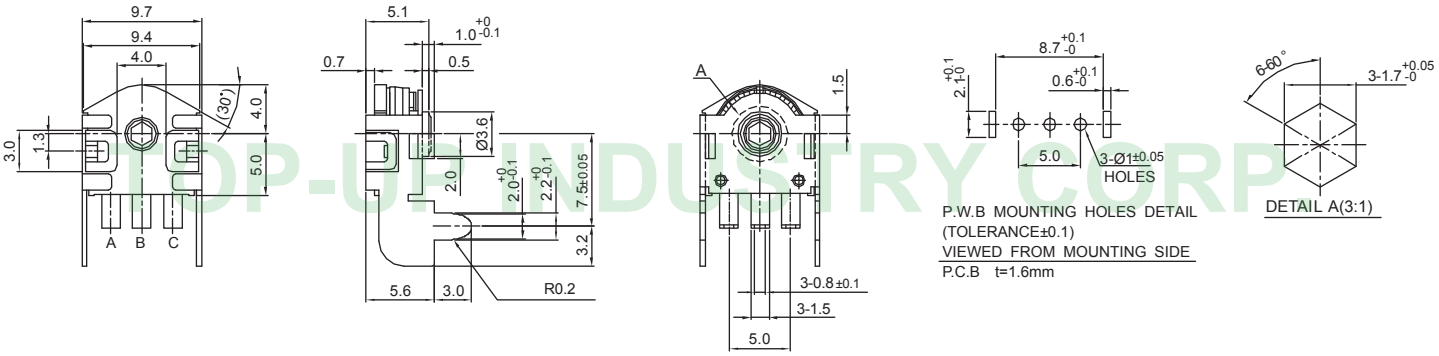

Products Specifications

Pulse	Number of detent	Phase difference (msec)	Chattering (msec)	Sliding noise (msec)	Insulation resistance	Dielectric strength	Detent torque (gf•cm)	Rotational life (cycle)
12	24	4 min.	5 max.	5 max.	50V DC 50MΩ MIN	50V AC 1 min	50±30	100,000

TOP-UP INDUSTRY CORP.

EC10JVF-D-16*1.6	EC10JVF-D-16*2.2	EC10JF-SMT-16*2.2

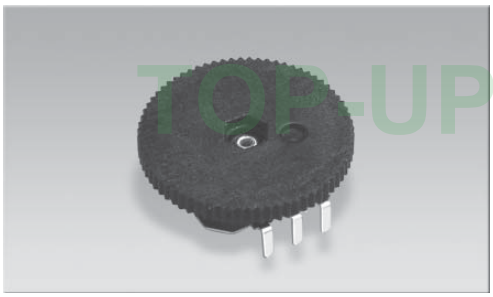
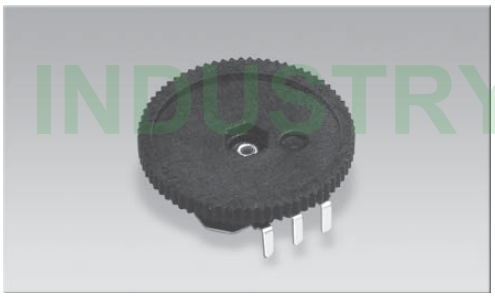
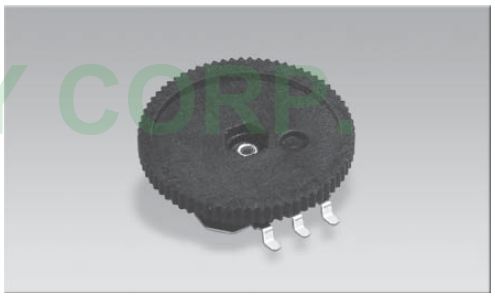

Outline Drawing | Features individual specifications

EC10JVF-D-16*1.6

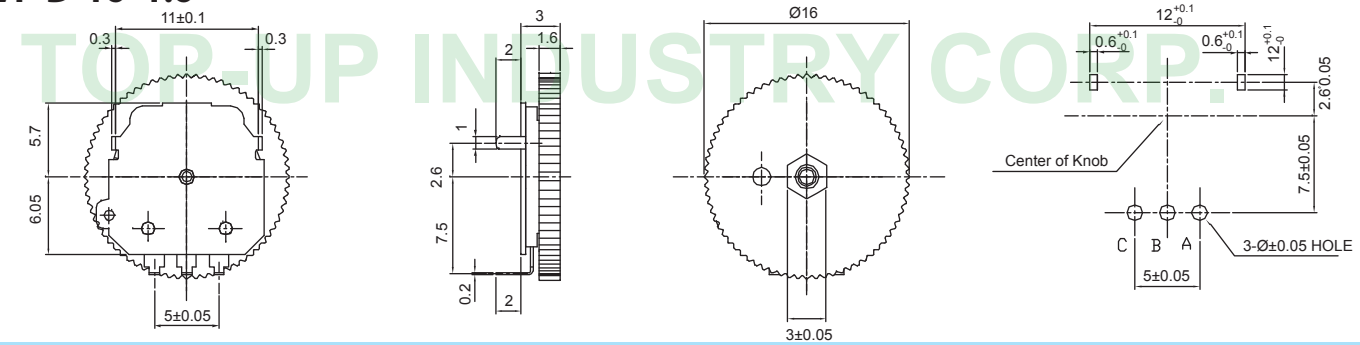

EC10JVF-D-16*2.2

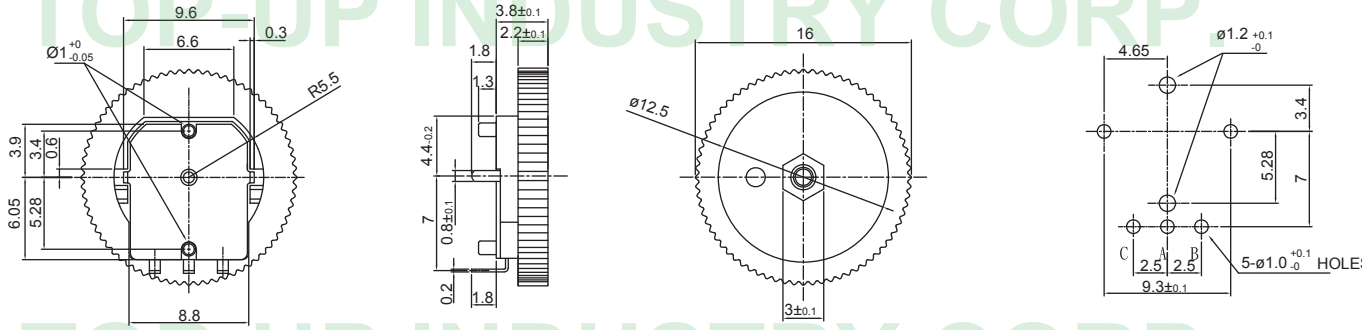

EC10JF-SMT-16*2.2

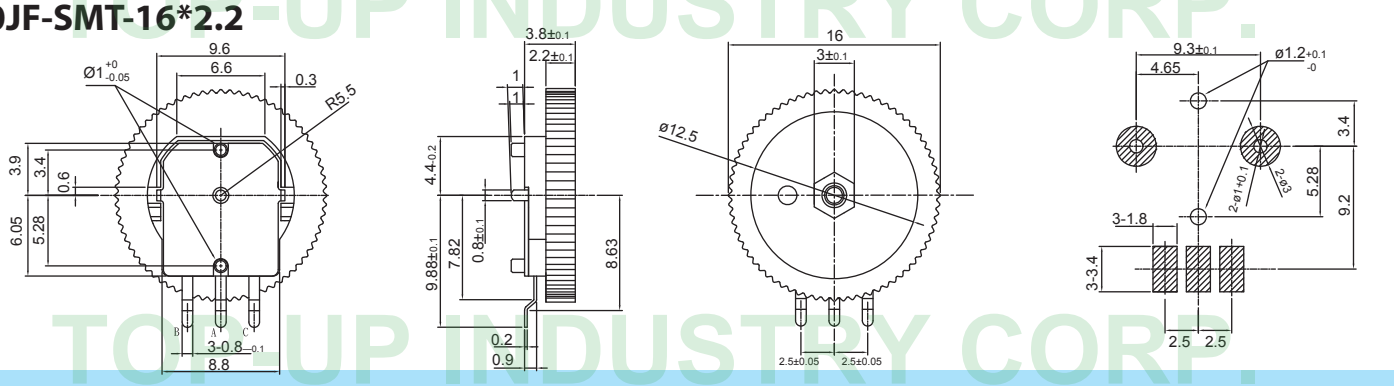

Common Specifications

Pulse	Number of detent	Phase difference (msec)	Chattering (msec)	Sliding noise (msec)	Insulation resistance	Dielectric strength	Detent torque (gf•cm)	Rotational life (cycle)
12	24	4	8	8	50V DC 50MΩ MIN	50V AC 1 min	10~100	10,000

The drawing and specification are for reference only. For further detail, please contact Top-Up head office.

EC11M Series Code Explanation

EC11M	S	D	V	□	NB	A	F	X -	D -	20	K -	20 -	20C -	□□□
1	2	3	4	5	6	7	8	9	10	11	12	13	14	15

1. Product Lines of EC11M (11mm Metal Shaft Encoder)
2. Switch : S- With Switch; Blank- Without Switch
3. Swtich Travel

Code	D	E
Travel	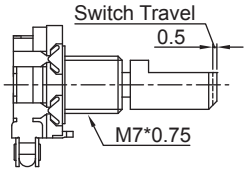	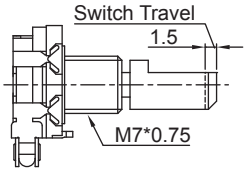

4. Horizontal Type (H) or Vertical Type (V)

Code	H	V
Horizontal or Vertical	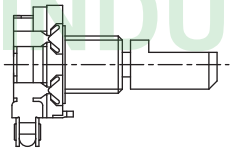	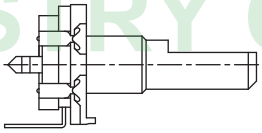

5. Bushing Length : Blank- 7mm (Standard Type)
6. Type of Bushing

1	(With Screw)	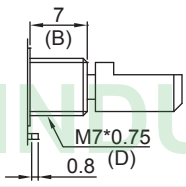				2	(Without Screw)	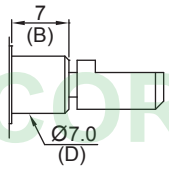	
	B (Standard)						NB (Standard)		
	Other type	B	5	9			Other type	B	3.5 / 5 / 10
		D	M7*0.75					D	Ø7.0

7. Bushing Material: Blank- Zinc Alloy, A-Aluminum Alloy
8. With Frame: "F"
9. Frame Size

Size	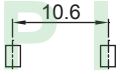	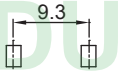	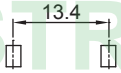	
Code	W	X	Y	Z

10. Type of Terminal

P.C.B Type			
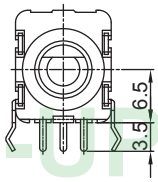	Horizontal	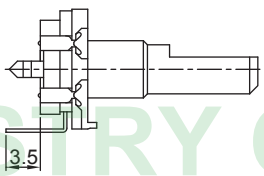	Vertical
	B		D
			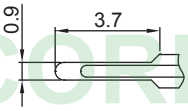

EC11M Series Code Explanation

EC11M	S	D	V	□	NB	A	F	X	-	D - 20	K -	20 -	20C	- □□□
1	2	3	4	5	6	7	8	9		10 11	12	13	14	15

11. Shaft Length (See Drawing 1)
12. Type of Shaft (See Drawing 1)

K - Type

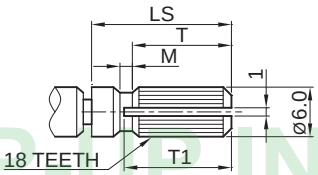

B: 5mm					B: 7mm				
L	15	20	25	30	L	15	20	25	30
LS	9.65	14.65	19.65	24.65	LS	7.65	12.65	17.65	22.65
T	6	10	10	12	T	5	9	10	12
M	1	1	2	4	M	0.5	1	2	4
T1	7	11	11	14	T1	5.5	10	11	14

F - Type

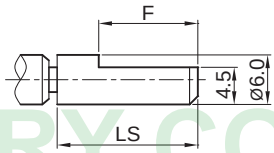

B: 5mm					B: 7mm				
L	15	20	25	30	L	15	20	25	30
LS	9.65	14.65	19.65	24.65	LS	7.65	12.65	17.65	22.65
F	7	12	12	12	F	5	7	12	12

S- Type

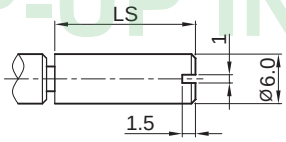

B: 5mm					B: 7mm				
L	15	20	25	30	L	15	20	25	30
LS	9.65	14.65	19.65	24.65	LS	7.65	12.65	17.65	22.65

R- Type

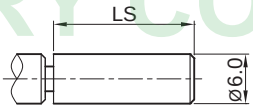

B: 5mm					B: 7mm				
L	15	20	25	30	L	15	20	25	30
LS	9.65	14.65	19.65	24.65	LS	7.65	12.65	17.65	22.65

(Drawing 1)

13. Output Pulse : 15 - 15Pulse

Pulse No.	15 Pulses	16 Pulses	20 Pulses
Detent NO.	30C	16C	20C

14. Number of Detent : Blank- None, 16C - 16 Detent
15. Series No.

The drawing and specification are for reference only. For further detail, please contact Top-Up head office.

EC11MHBFZ-B	EC11MSDHBFZ-B	EC11MSEHBFZ-B

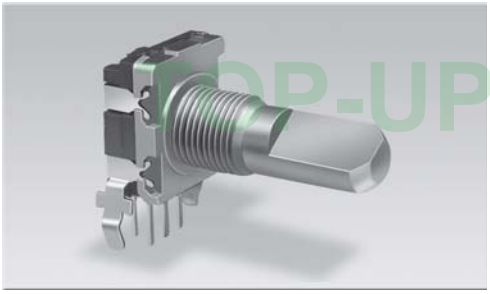

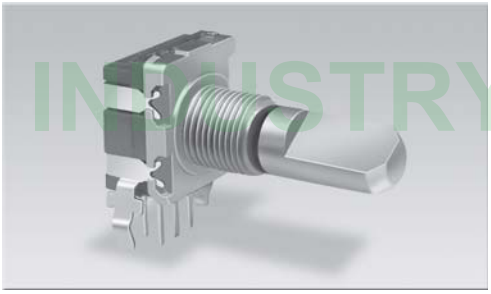

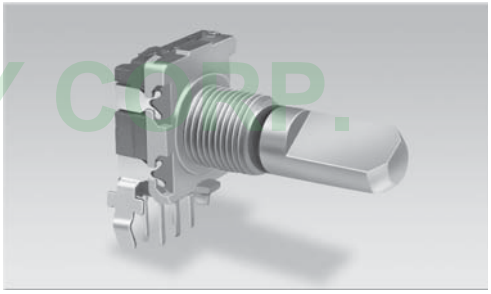

Outline Drawing | Features individual specifications

EC11MHBFZ-B

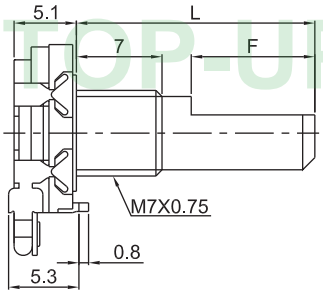

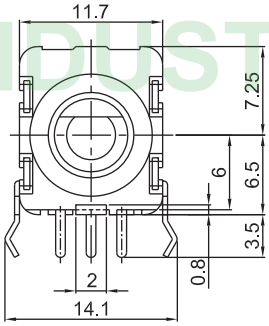

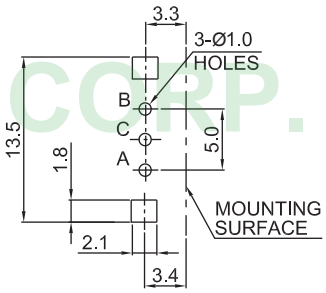

MOUNTING HOLES DETAIL
VIEWED FROM MOUNTUNG SIDE

EC11MSDHBFZ-B

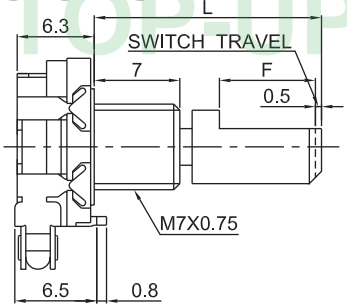

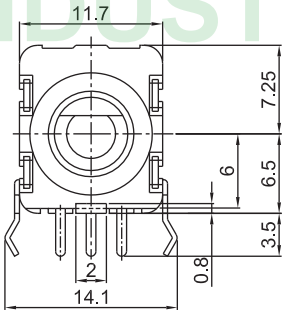

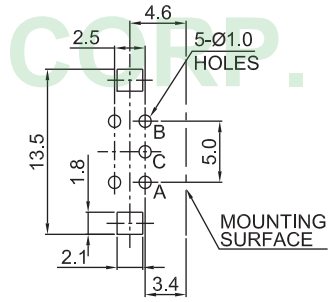

MOUNTING HOLES DETAIL
VIEWED FROM MOUNTUNG SIDE

EC11MSEHBFZ-B

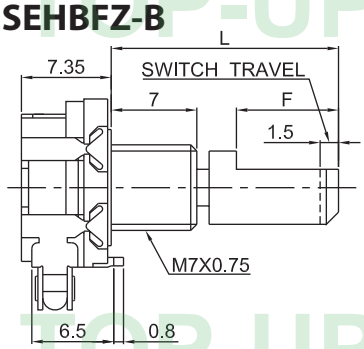

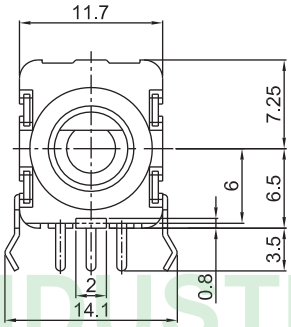

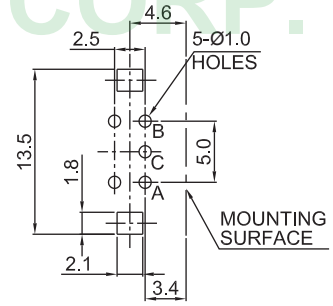

MOUNTING HOLES DETAIL
VIEWED FROM MOUNTUNG SIDE

Products Specifications

Pulse	Number of detent	Phase difference (msec)	Chattering (msec)	Sliding noise (msec)	Insulation resistance	Dielectric strength	Detent torque (gf.cm)	Rotational life (cycle)
15	30	6 min.	2 max.	2 max.	250VDC 100M MIN	300V AC 1 min	122.4±71.4	15,000
16	16	4 min.	3 max.	3 max.			150±100	
20	20	4 min.	2 max.	2 max.			122.4±71.4	
24	24	3.5 min.	5 max.	5 max.			150±100	

TOP-UP INDUSTRY CORP.

EC11MVNBFX-D	EC11MSDVNBFX-D	EC11MSEVNBFX-D

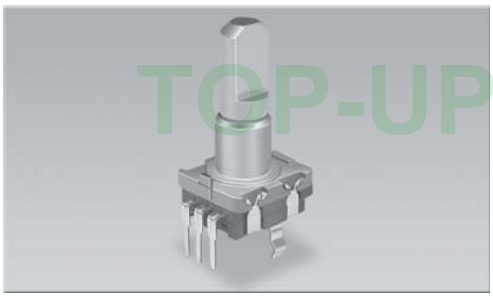
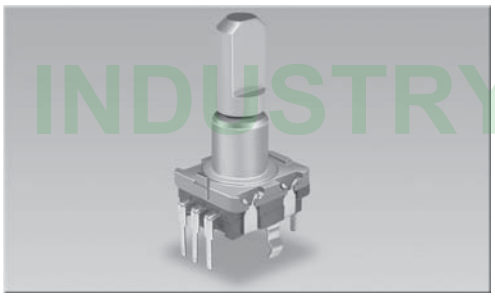
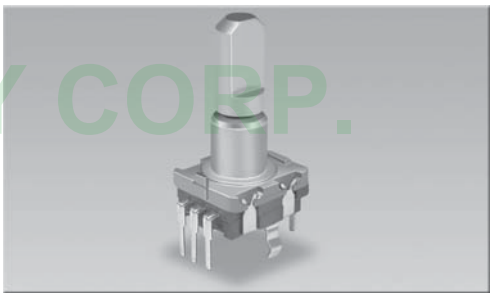

Outline Drawing | Features individual specifications

EC11MVNBFX-D

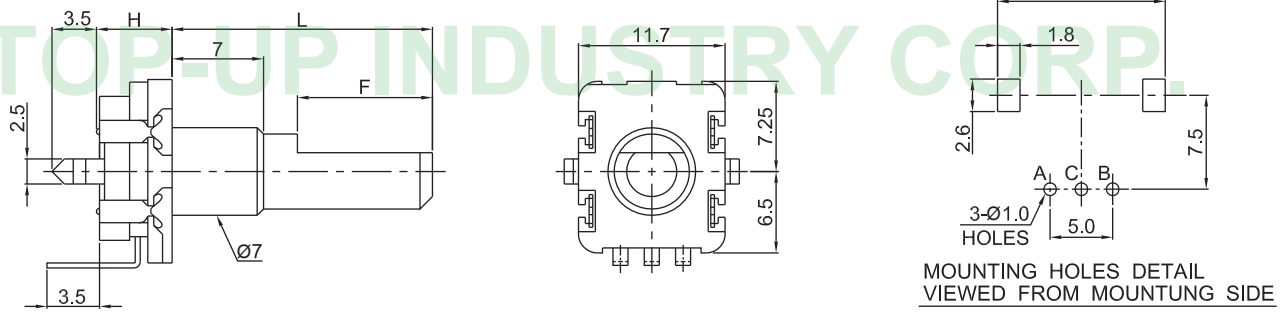

EC11MSDVNBFX-D

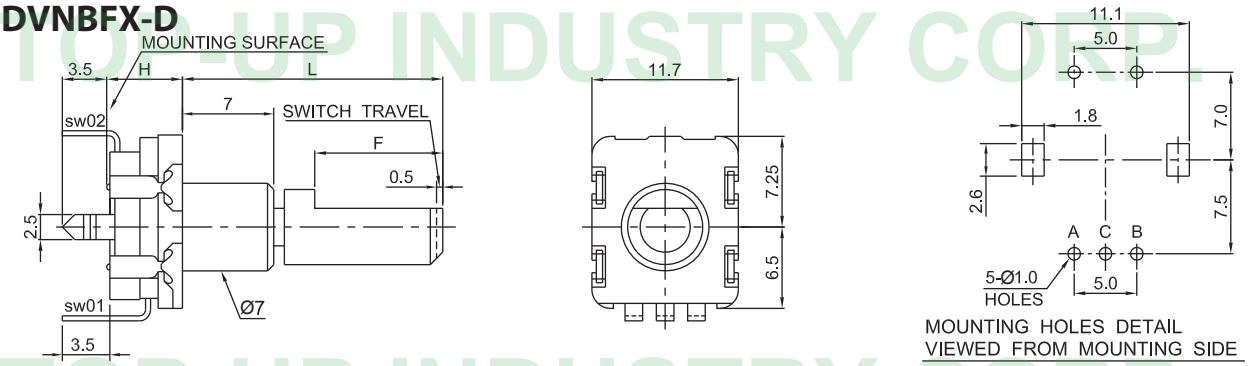

EC11MSEVNBFX-D

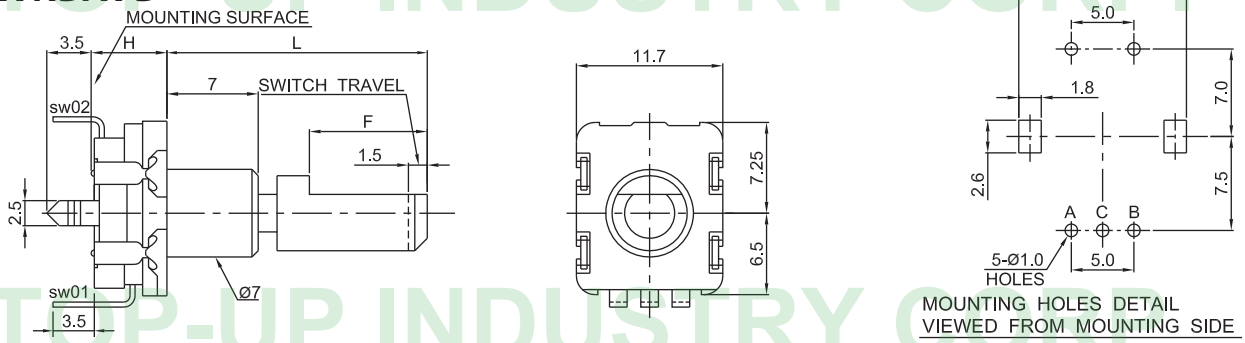

Switch Specifications

Rating	Contact resistance	Insulation resistance	Dielectric strength	Contact arrangement	Travel of switch (mm)	Operating force (gf)	Operating life (cycle)
DC 5V 10mA	100mΩ	250V DC 100mΩ MIN	300V AC 1 min	PUSH ON	0.5	600±300	20,000
					1.5	357 +112 -71	

The drawing and specification are for reference only. For further detail, please contact Top-Up head office.

11mm LOW-PROFILE (GENERAL PURPOSE) ENCODERS

TOP-UP INDUSTRY CORP.

Incremental Type:

Size	Model	Pulse/rotation	Number of detent	Rotatic dual angle	Mounting method	Others
11mm	EC11M	20/360° 15/360° 16/360°	20 30 16	360° (Endless)	Fastened with bushing unit /snap -in	With push -on switch (Model without switch also available)

Standard Dimensions of Shaft And Buashing:

Bushing	H Dimensions			B
	Without Switch	0.5 Switch	1.5 Switch	
Ø7	5.0	6.2	7.15	3.5 or 7
M7x0.75	5.4	6.6	7.55	5 or 7

Mechanical Characteristics:

Total rotational angle	360°
Click torque	5~19mN.m (51~194gf.cm)
Push pull strength	80N (8kgf)

Electrical Characteristics:

Ratings	5V DC, 10mA
Withstand voltage	300V AC
Max. operating current	10mA
Insulation resistance	More than 100mΩ at DC 300V

Durability:

Rotational life	15,000 cycles

EC11LM Series Code Explanation

EC11LM	S	D	V	5	NB	F	-	D	-	20	K	-	10	-	30C	-	□□□
1	2	3	4	5	6	7		8		9	10		11		12		13

1. Product Lines of EC11LM (11mm Slim Type Encoder)
2. Switch : S- With Switch; Blank- Without Switch
3. Swtich Travel

Code	D	E
Travel	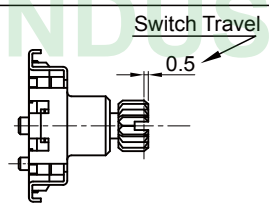	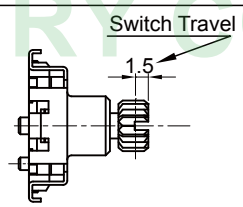

4. Vertical Type (V)

Code	V
Vertical	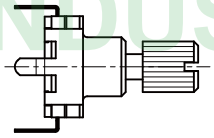

5. Bushing Length
6. Type of Bushing

(Without Screw) NB (Standard)	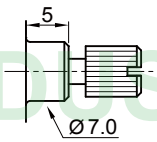

7. Type of Frame

F	F1
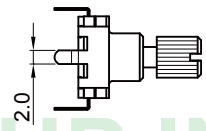	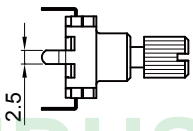

8. Type of Terminal

P.C.B Type		SMD Type
	Vertical	SMT
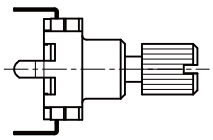	D 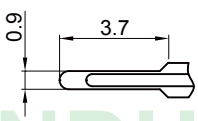	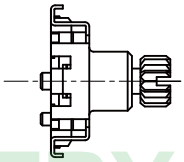

9. Shaft Length

TOP-UP INDUSTRY CORP.

The drawing and specification are for reference only. For further detail, please contact Top-Up head office.

EC11LM Series Code Explanation

EC11LM	S	D	V	5	NB	F	- D -	20	K -	10 -	30C -	□□□
1	2	3	4	5	6	7	8	9	10	11	12	13

10. Type of Shaft

	Without Switch			0.5mm Switch Stroke			1.5mm Switch Stroke		
K (Zinc Diecast)	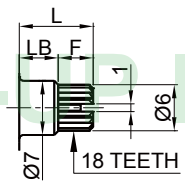			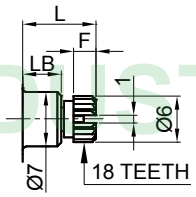			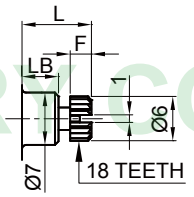		
	L	LB	F	L	LB	F	L	LB	F
	9.5	5	4.5	9.5	5	2.9	9.5	5	2.9
				13.5	5	6.9	13.5	5	6.9
K1 (Aluminum)	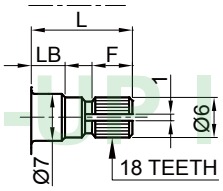			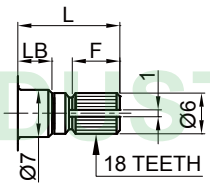			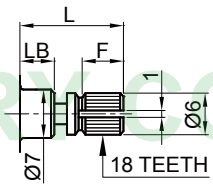		
	L	LB	F	L	LB	F	L	LB	F
	15	5	8	15	5	7	15	5	6
	20	7	10	20	7	9	20	7	8
F Type	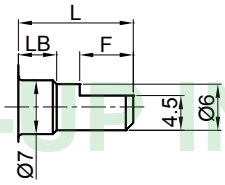			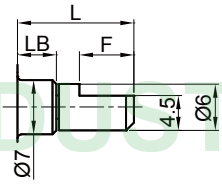			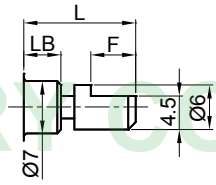		
	L	LB	F	L	LB	F	L	LB	F
	15	5	7	15	5	7	15	5	7
	20	7	12	20	7	10	20	7	10

11. Output Pulse : 15 - 15 Pulse
12. Number of Detent: Blank- None, 30C -30 Detent
13. Series No.

TOP-UP INDUSTRY CORP.

EC11LM5NBF-SMT	EC11LMSD5NBF-SMT	EC11LMSE5NBF-SMT	EC11LMV5NBF-D

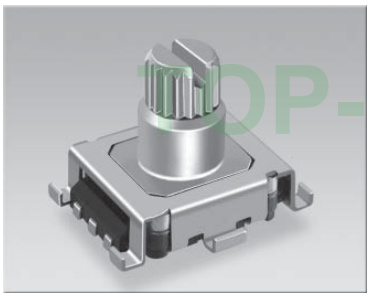
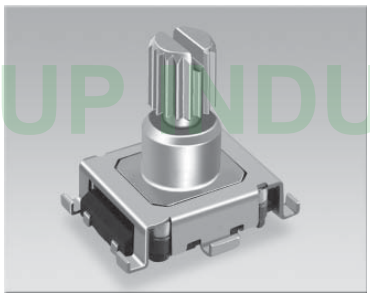
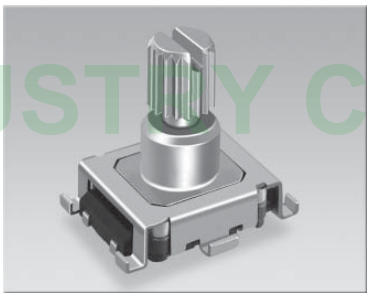
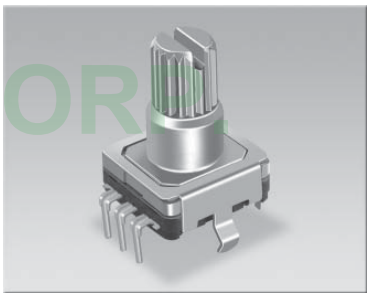

Outline Drawing | Features individual specifications

EC11LM5NBF-SMT

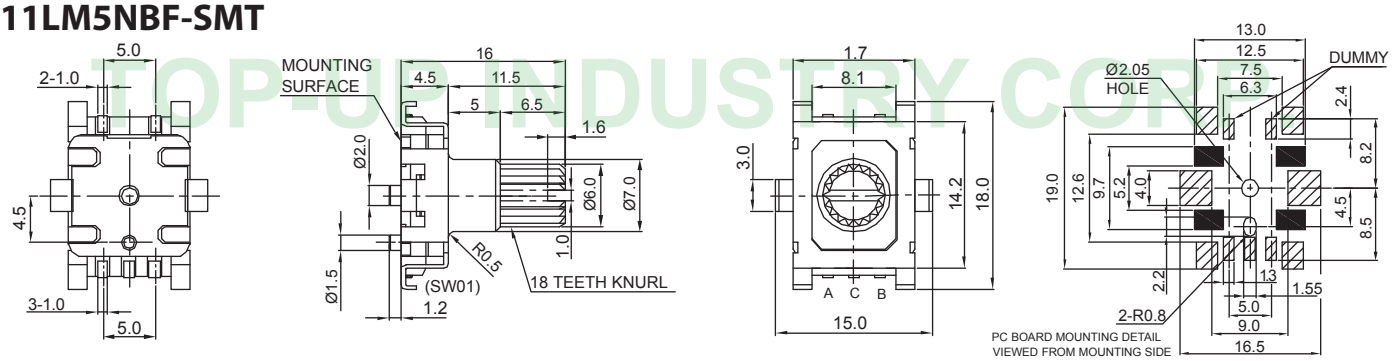

EC11LMSD5NBF-SMT

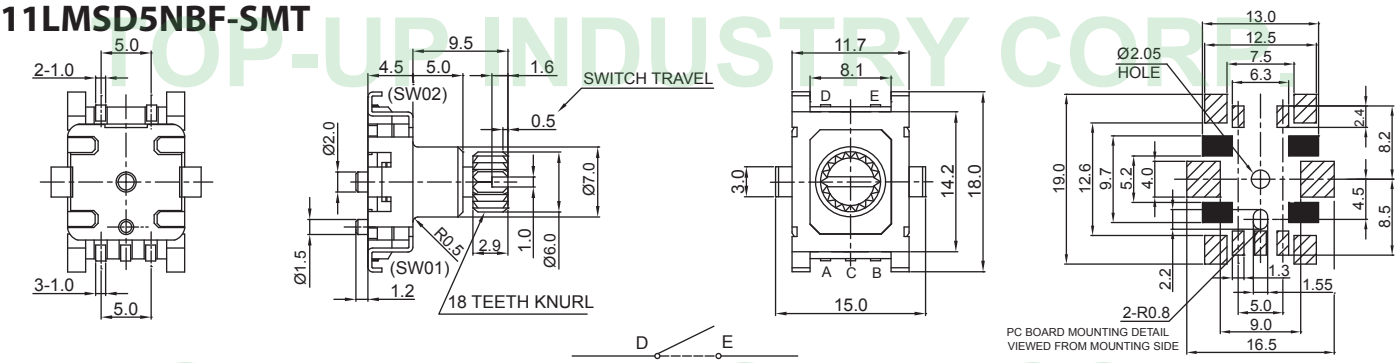

EC11LMSE5NBF-SMT

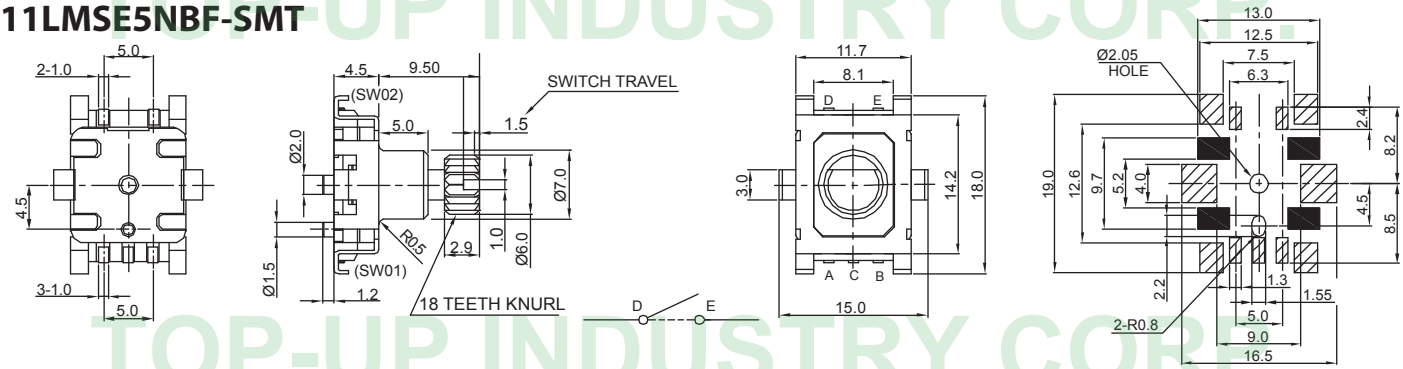

EC11LMV5NBF-D

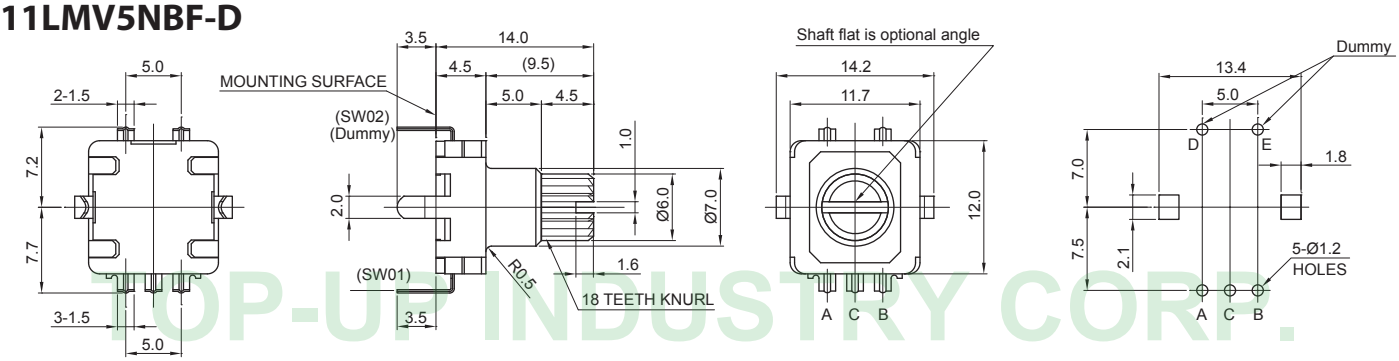

TOP-UP INDUSTRY CORP.

The drawing and specification are for reference only. For further detail, please contact Top-Up head office.

EC11LMSDV5NBF-D	EC11LMSEV5NBF-D	ER11LM5NBF1-D

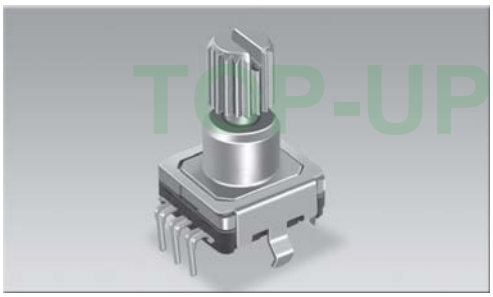

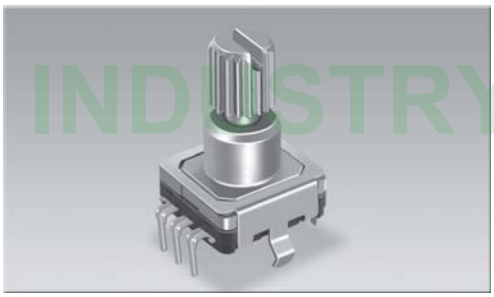

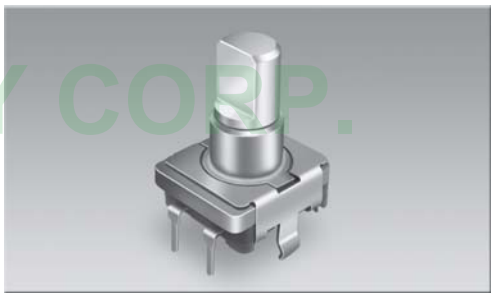

Outline Drawing

Features individual specifications

EC11LMSDV5NBF-D

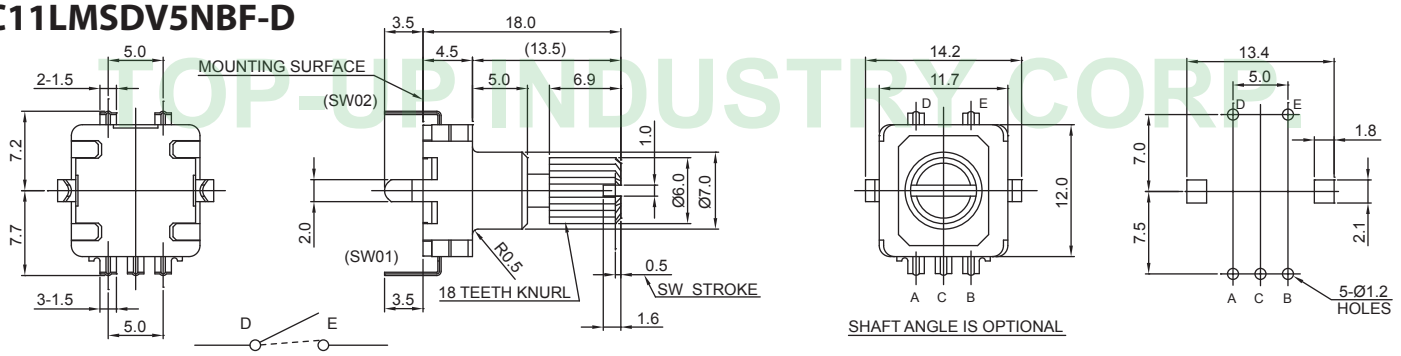

EC11LMSEV5NBF-D

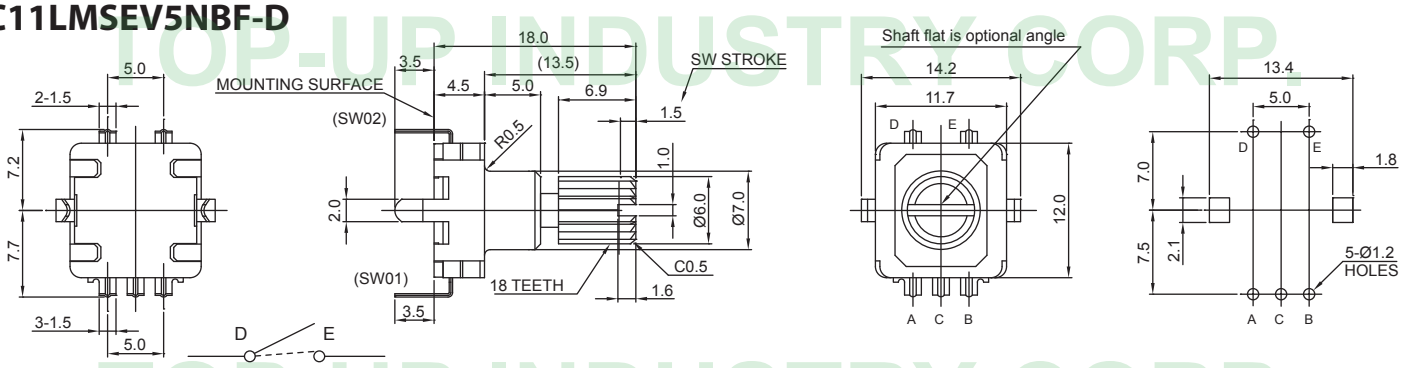

ER11LM5NBF1-D

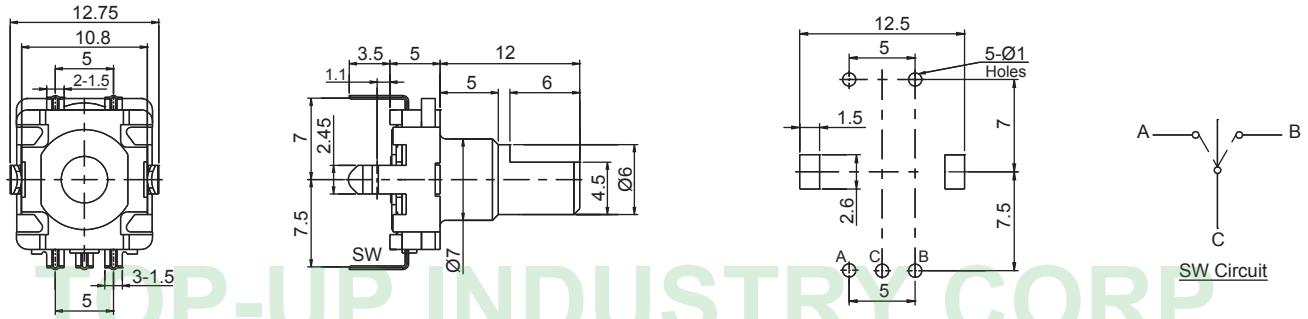

Products Specifications

Pulse	Number of detent	Phase difference (msec)	Chattering (msec)	Sliding noise (msec)	Insulation resistance	Dielectric strength	Detent torque (gf•cm)	Rotational life(cycle)
15	30	6 min.	2 max.	2 max.	250V DC 100MΩ MIN	300V AC 1 min	100±70	15,000

Switch Specifications

Rating	Contact resistance	Insulation resistance	Dielectric strength	Contact arrangement	Travel of switch(mm)	Operating force(gf)	Operating life(cycle)
DC 5V	100mΩ	250V DC 100MΩ MIN	300V AC 1 min	PUSH ON	0.5	300±100	20,000
					1.5	400±200	

EC12P Series Code Explanation

EC12P	L	□□	S	D	V	B	F	A	-	D	-	20	F	T	-	12	-	12C	-	□□□
1	2	3	4	5	6	7	8	9		10		11	12	13		14		15		16

1. Product Lines of EC12P (12mm Insulated Shaft Encoder)
2. With " LED "
3. LED Color

Single Color	Code	B		R		O		D				G		L		W	
	Color	Blue		Red		Orange		Darkorange				Green		Lawngreen		White	
Dual Color	Code	BG				BO			GR				RG			GO	
	Color	Blue	Green			Blue	Orange		Green	Red			Red	Green		Green	Orange
	Code	BR				WR			—								
	Color	Blue	Red			White	Red										
Triple Color	Code	RGB							—								
	Color	Red	Green			Blue											

4. Switch : Blank - Without Switch , S-With Switch
5. Switch Travel

D

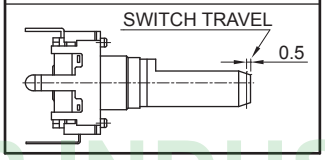

6. Horizontal Type (H) or Vertical Type (V)

H	V
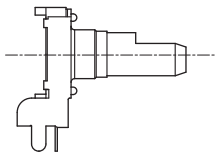	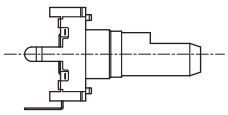

7. With Bushing : Blank- Without Bushing ; B- with Bushing

B (Standard Type)

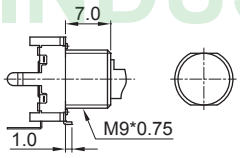

8. With Frame: "F"

Frame Size (Snap-in)	Horizontal	Vertical

9. "LB" Length: Blank-5mm (Standard Type)

Horizontal	Vertical		
Standard	Standard	A	C
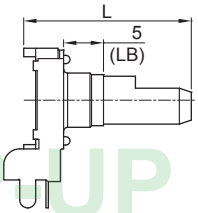	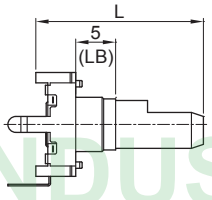	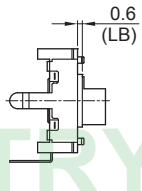	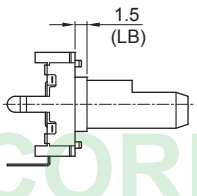

TOP-UP INDUSTRY CORP.

The drawing and specification are for reference only. For further detail, please contact Top-Up head office.

EC12P Series Code Explanation

EC12P	L	□□	S	D	V	B	F	A	-	D	-	20	F	T	-	12	-	12C	-	□□□
1	2	3	4	5	6	7	8	9		10		11	12	13		14		15		16

10. Type of Terminal

P.C.B Type			
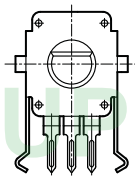	Horizontal B 	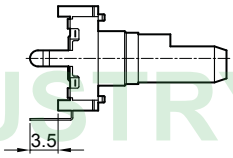	Vertical D

11. Shaft Length
12. Type of Shaft

F - Type

With Bushing

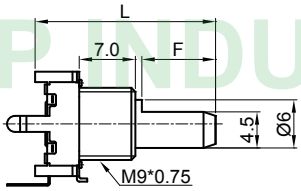

L	15	17.5	20	22.5	25	30
F	7	5	7	7	12	12

Without Bushing

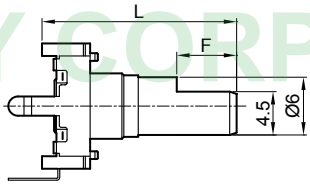

L	15	17.5	20	22.5	25	30
F	7	5	7	7	12	12

K - Type

Without Bushing

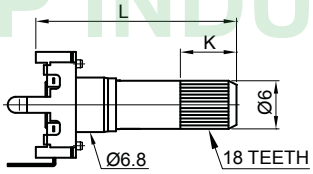

L	20	25
K	7	7

13. Shaft Color : T - Transparent , Blank - Black
14. Output Pulse : 12 - 12Pulse
15. Number of Decent : Blank- None , 12 -12C

Pulse NO.	12 Pulses	18 Pulses	24 Pulses
Decent NO.	12C	18C	24C

16. Serial No.

TOP-UP INDUSTRY CORP.

EC12PHF-B	EC12PSDHF-B	EC12PVFA-D

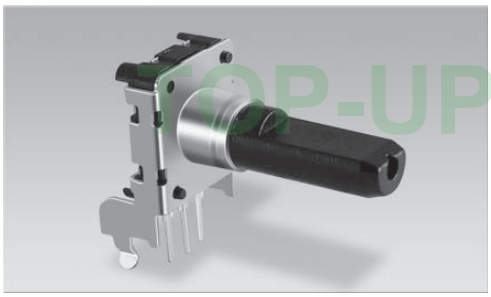

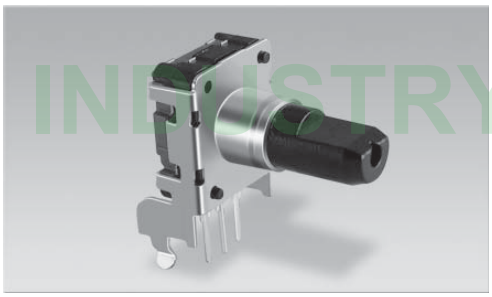

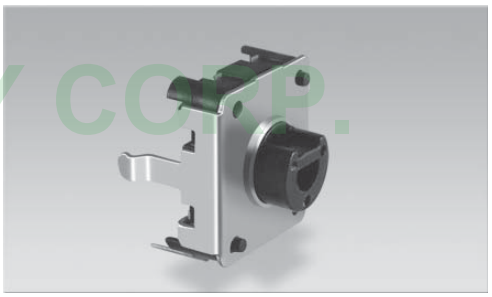

Outline Drawing | Features individual specifications

EC12PHF-B

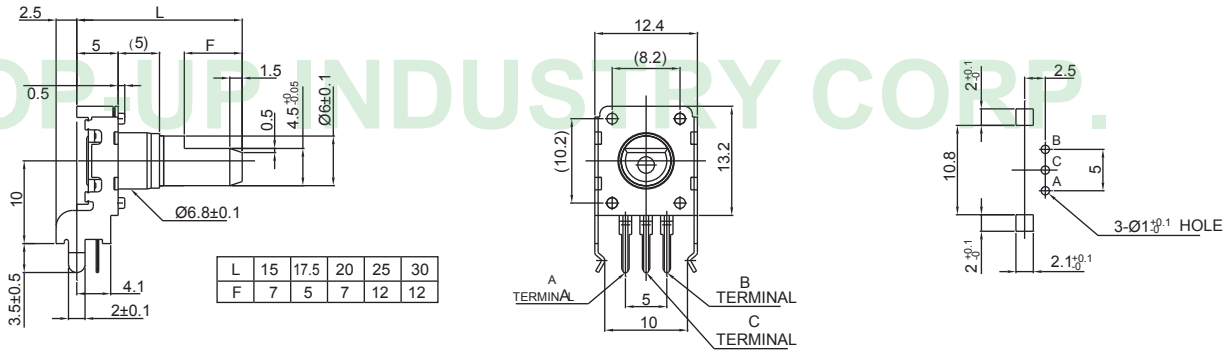

L	15	17.5	20	25	30
F	7	5	7	12	12

EC12PSDHF-B

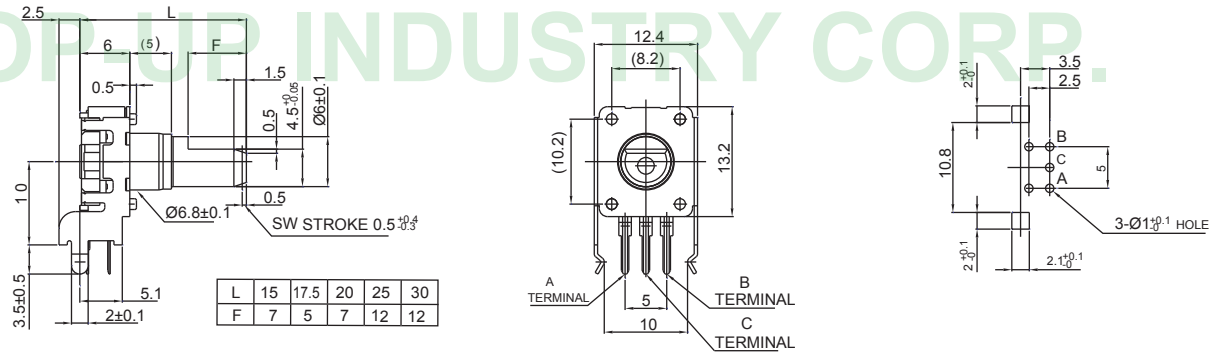

L	15	17.5	20	25	30
F	7	5	7	12	12

EC12PVFA-D

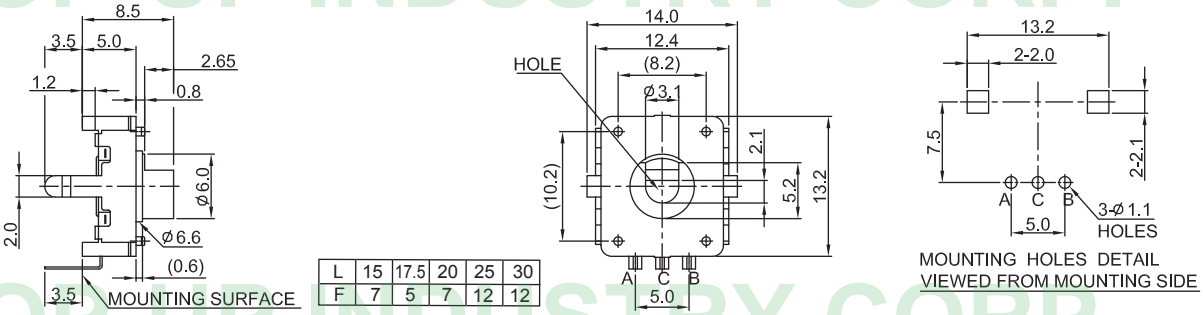

L	15	17.5	20	25	30
F	7	5	7	12	12

Products Specifications

Pulse	Number of detent	Phase difference (msec)	Chattering (msec)	Sliding noise (msec)	Insulation resistance	Dielectric strength	Detent torque (gf·cm)	Rotational life (cycle)
24	24	3.5 min.	3 max.	2 max.	50V DC 100MΩ MIN	50V AC 1 min	30.1~200.4	30,000
							30.1~200.4	

The drawing and specification are for reference only. For further detail, please contact Top-Up head office.

EC12PVF-D	EC12PSDVF-D	EC12PVBF-D

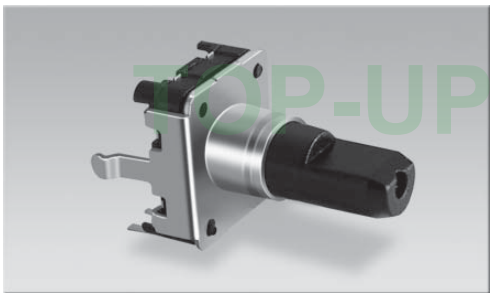

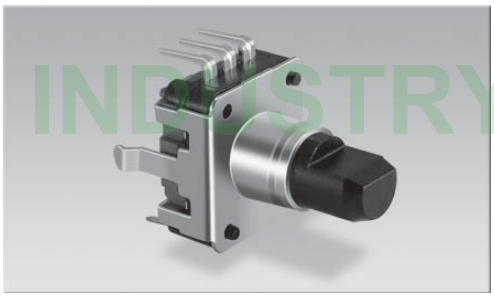

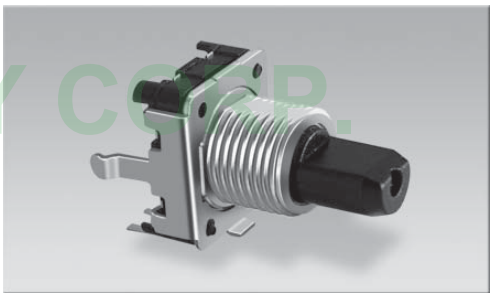

Outline Drawing | Features individual specifications

EC12PVF-D

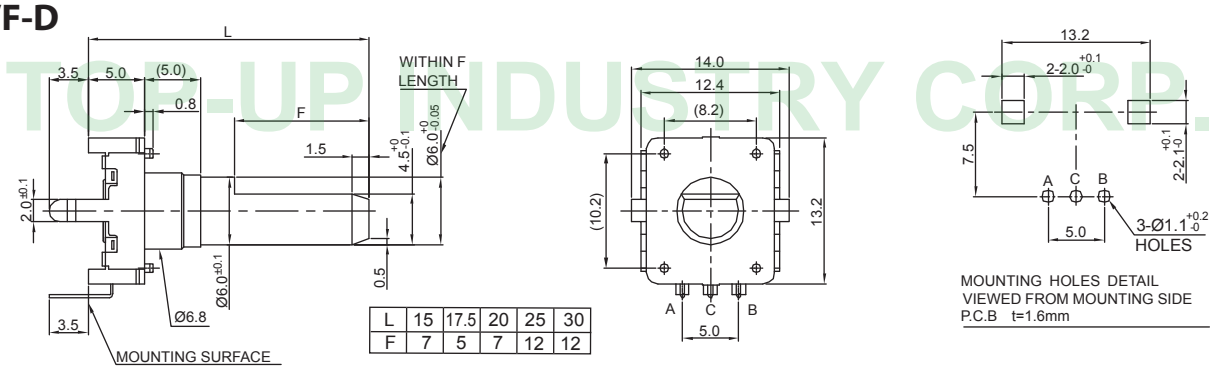

L	15	17.5	20	25	30
F	7	5	7	12	12

EC12PSDVF-D

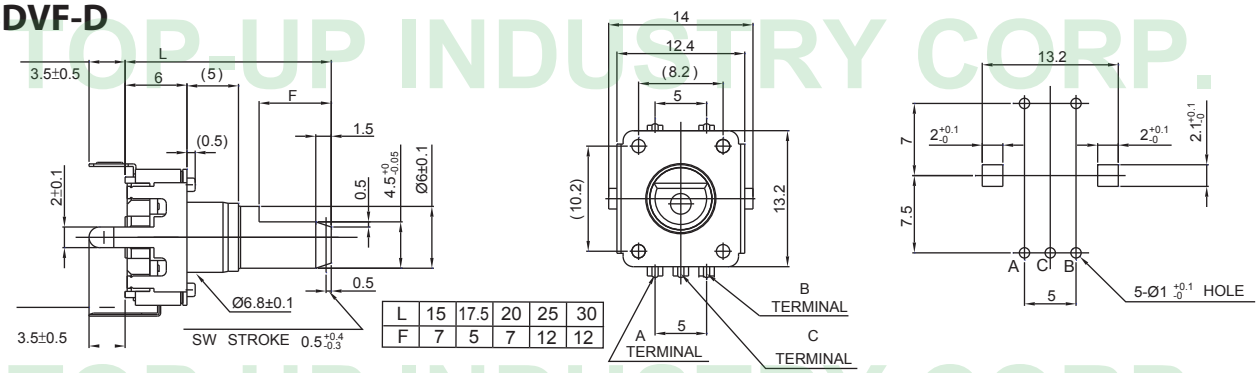

L	15	17.5	20	25	30
F	7	5	7	12	12

EC12PVBF-D

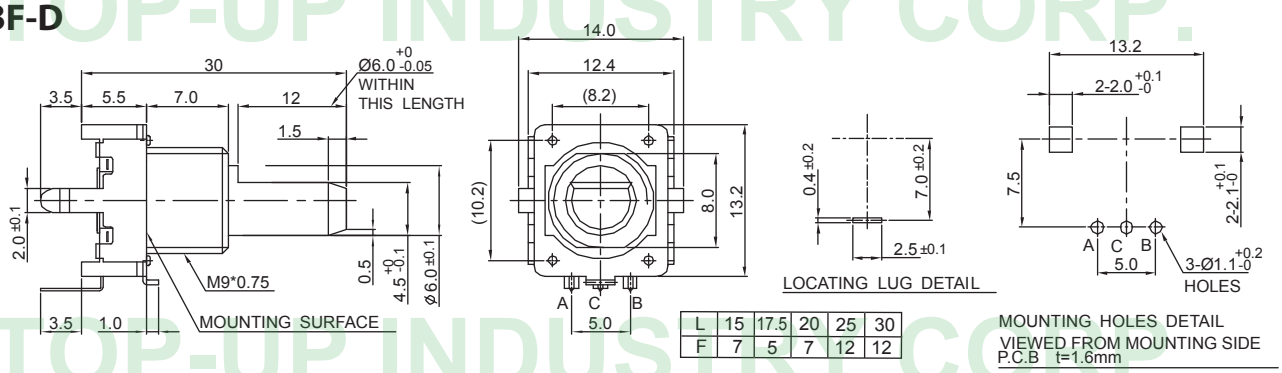

L	15	17.5	20	25	30
F	7	5	7	12	12

Switch Specifications

Rating	Contact resistance	Insulation resistance	Dielectric strength	Contact arrangement	Travel of switch (mm)	Operating force (gf)	Operating life (cycle)
DC 5V 10mA	100mΩ	250V DC 100MΩ MIN	300V AC 1 min	PUSH ON	0.5	300 +150 - 100	20,000

TOP-UP INDUSTRY CORP.

EC12PV12BF-D	EC12PVBF-D1	EC12PVBPF-D

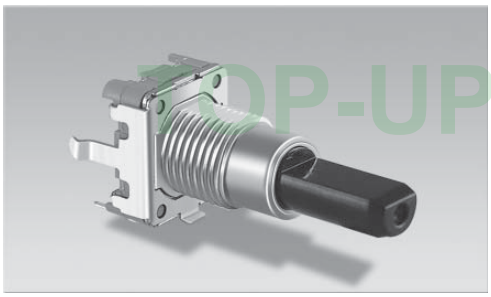
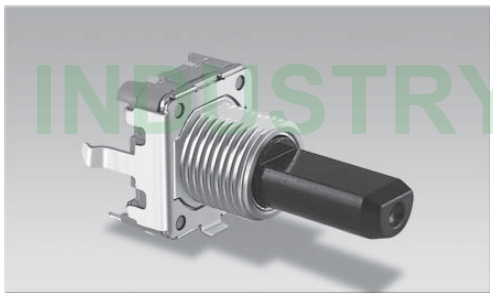
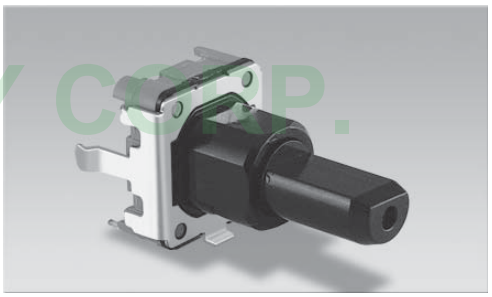

Outline Drawing | Features individual specifications

EC12PV12BF-D

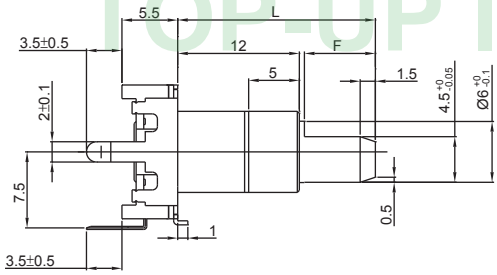

L	24.5	29.5
F	12	12

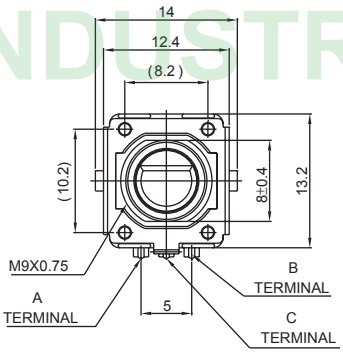

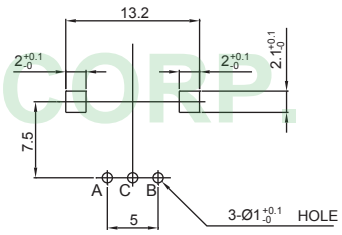

DETAIL OF TERMINALS (10 : 1)

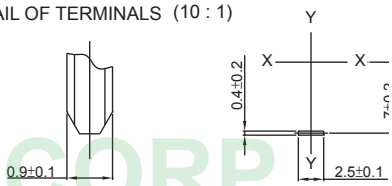

EC12PVBF-D1

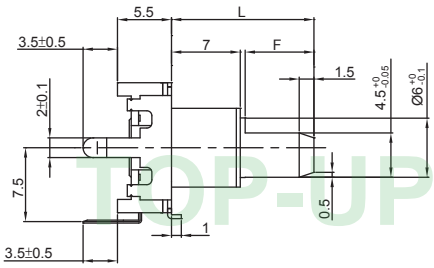

L	14.5	19.5	19.5	24.5	29.5
F	7	7	12	12	12

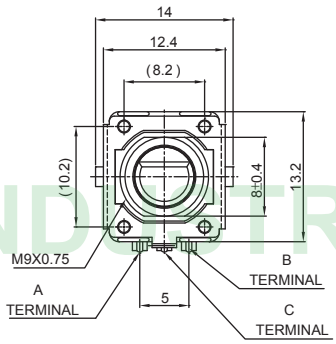

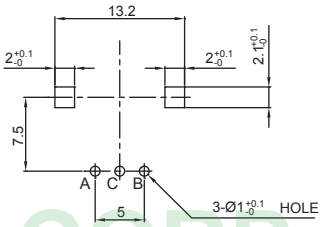

DETAIL OF TERMINALS (10 : 1)

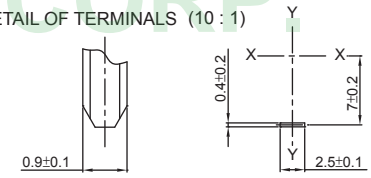

EC12PVBPF-D

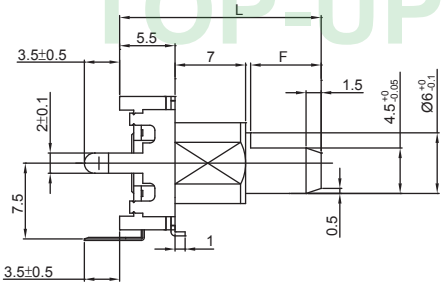

L	20	25	25	30	35
F	7	7	12	12	12

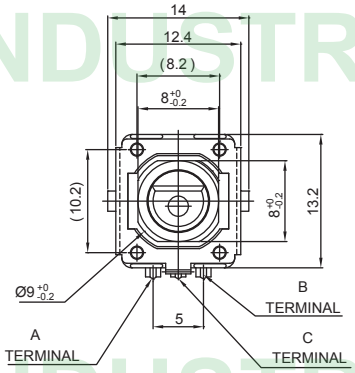

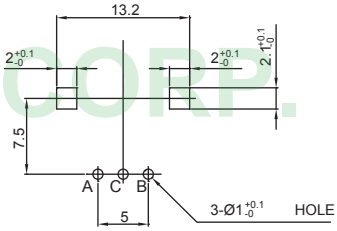

DETAIL OF TERMINALS (10 : 1)

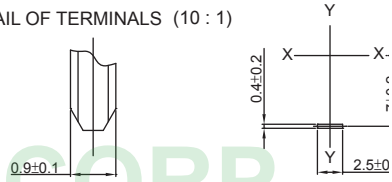

TOP-UP INDUSTRY CORP.

The drawing and specification are for reference only. For further detail, please contact Top-Up head office.

EC12PL□HF-B | EC12PL□VF-D | EC12PL□□SDHF-B(RGB) | EC12PL□□SDVF-D(RGB)

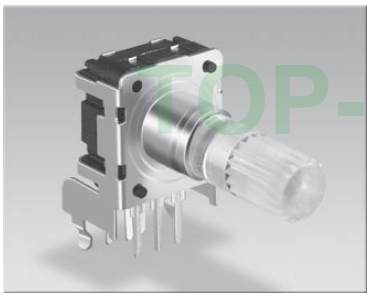
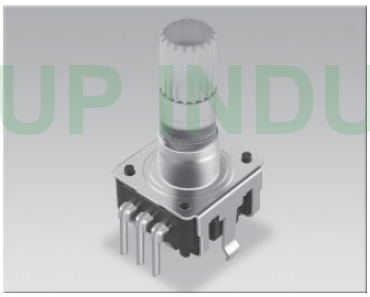
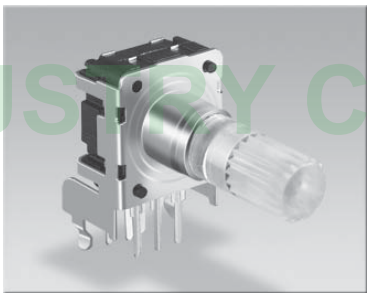
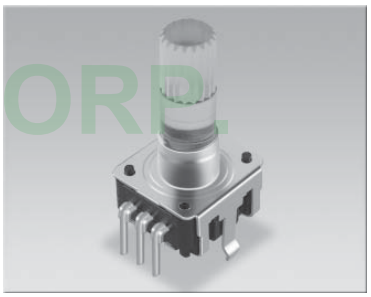

Outline Drawing | Features individual specifications

EC12PL□HF-B

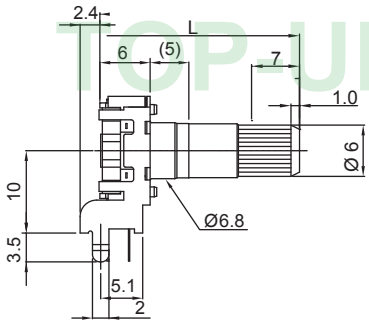

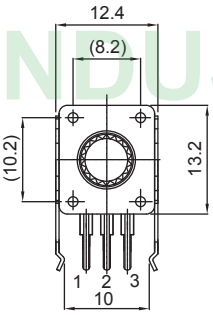

LED COLOR:

CODE	COLOR
O	ORANGE
B	BLUE
R	RED
G	GREEN
W	WHITE

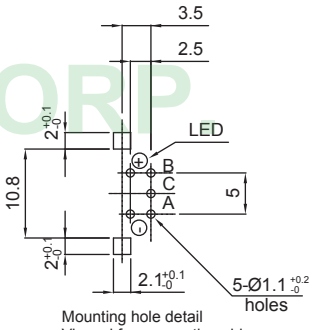

Mounting hole detail
Viewed from mounting side
P.C.B t=1.6mm

EC12PL□VF-D

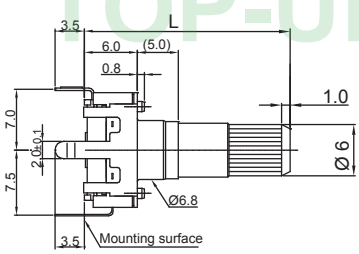

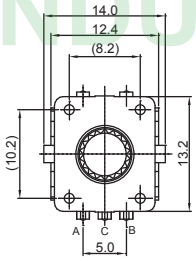

LED color:

Code	Color
G	Green
B	Blue
R	Red
O	Orange
W	White

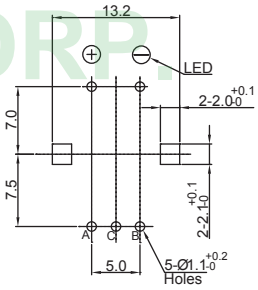

Mounting holes detail viewed
from mounting side
P.C.B t=1.6mm

EC12PL□□SDHF-B(RGB)

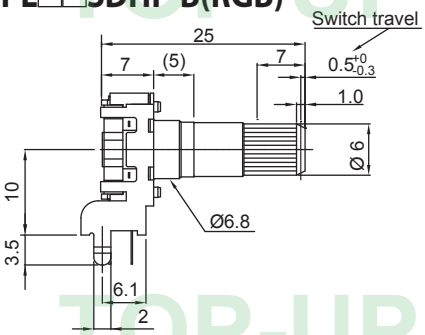

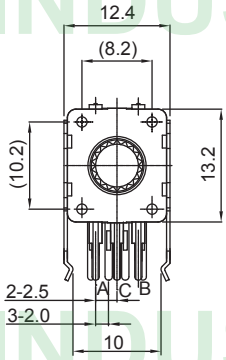

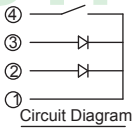

LED COLOR:

CODE	COLOR
O	ORANGE
B	BLUE
R	RED
G	GREEN
W	WHITE

RGB COLOR:

CODE	COLOR	PIN NO.
RGB	RED	1 5
	GREEN	2 5
	BLUE	4 5

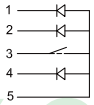

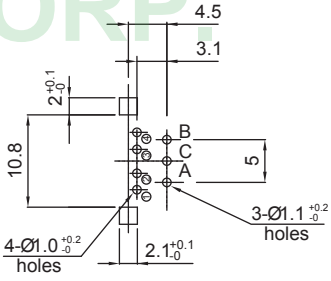

Mounting hole detail
Viewed from mounting side
P.C.B t=1.6mm

EC12PL□□SDVF-D(RGB)

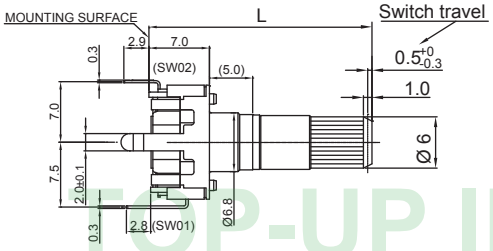

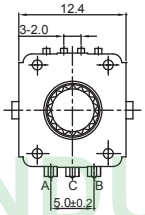

LED COLOR:

CODE	COLOR	TERMINAL
O	ORANGE	
B	BLUE	
R	RED	1 3
G	GREEN	1 2

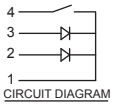

LED COLOR:

CODE	COLOR	TERMINAL
O	ORANGE	1 3
B	BLUE	1 2
R	RED	
G	GREEN	

LED COLOR:

CODE	COLOR	TERMINAL
O	ORANGE	
B	BLUE	1 2
R	RED	
G	GREEN	1 3

RGB COLOR:

CODE	COLOR	PIN NO.
RGB	RED	1 5
	GREEN	2 5
	BLUE	4 5

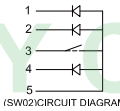

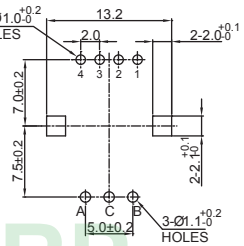

MOUNTING HOLES DETAIL
VIEWED FROM MOUNTING SIDE
P.C.B t=1.5mm

TOP-UP INDUSTRY CORP.

EC16P Series Code Explanation

EC16P	S	H	5	B	F	- B	- 20	F	- 24	- □C	- □□□
1	2	3	4	5	6	7	8	9	10	11	12

1. Product Lines of EC16P(16mm Insulated Shaft Encoder)
2. With Switch: "S"
3. Horizontal(H) Type or Vertical (V) Type

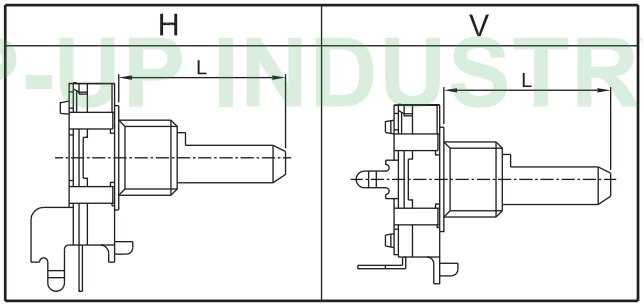

4. Bushing Length : Keep Blank On Code if it's Standard Type With 7mm.
5. With Bushing

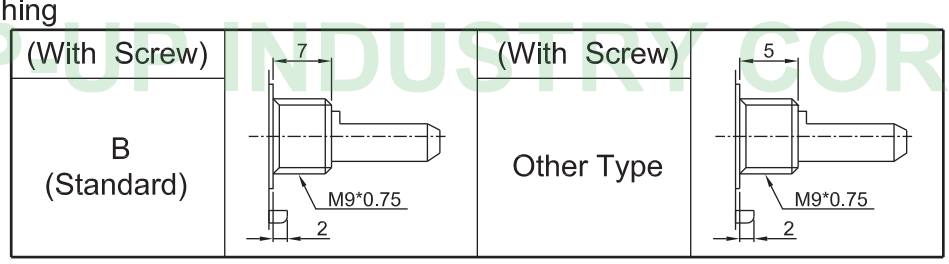

6. With Frame: "F"

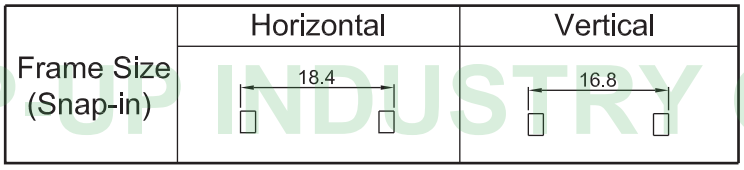

7. Type of Terminal

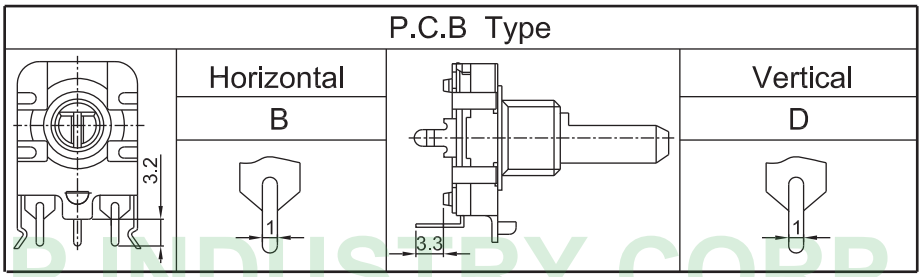

8. Shaft Length
9. Type of Shaft

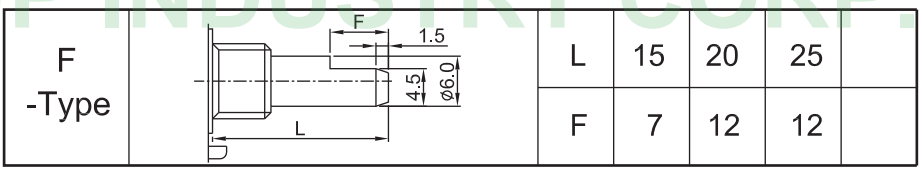

10. Output Pulse

Pulse No.	Code	24
	Pulse	24 Pulses

11. Number of Clicks : Blank-None, 1C-Center Click
12. Serial No.

TOP-UP INDUSTRY CORP.

The drawing and specification are for reference only. For further detail, please contact Top-Up head office.

EC16PHBF-B	EC16PVBF-D	LED-CCL-A

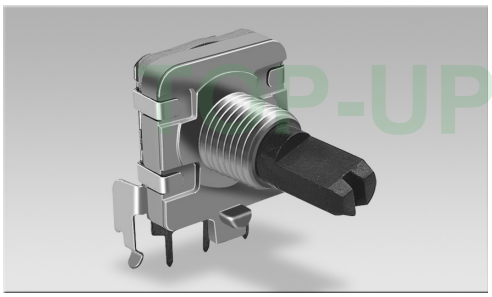

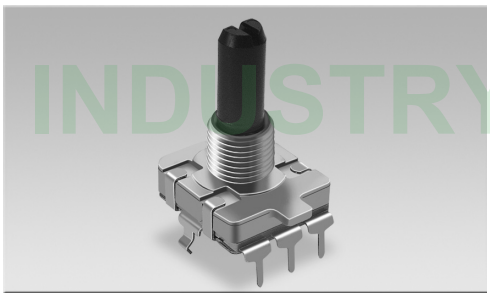

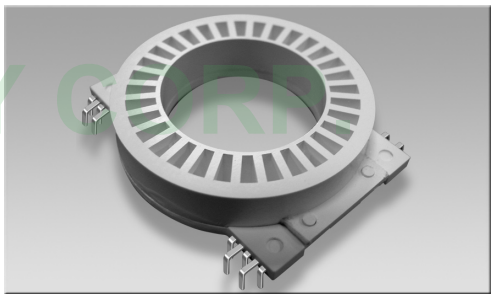

Outline Drawing | Features individual specifications

EC16PHBF-B

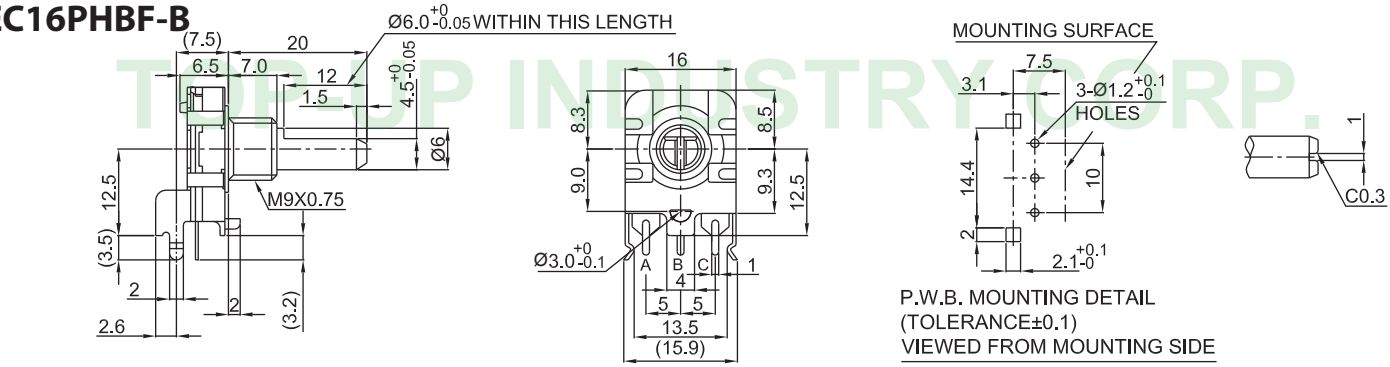

EC16PVBF-D

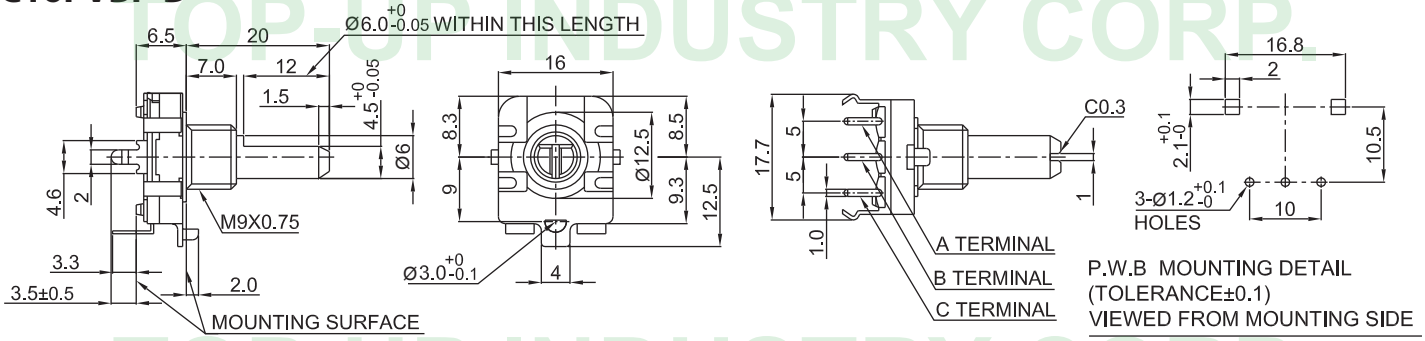

LED-CCL-A

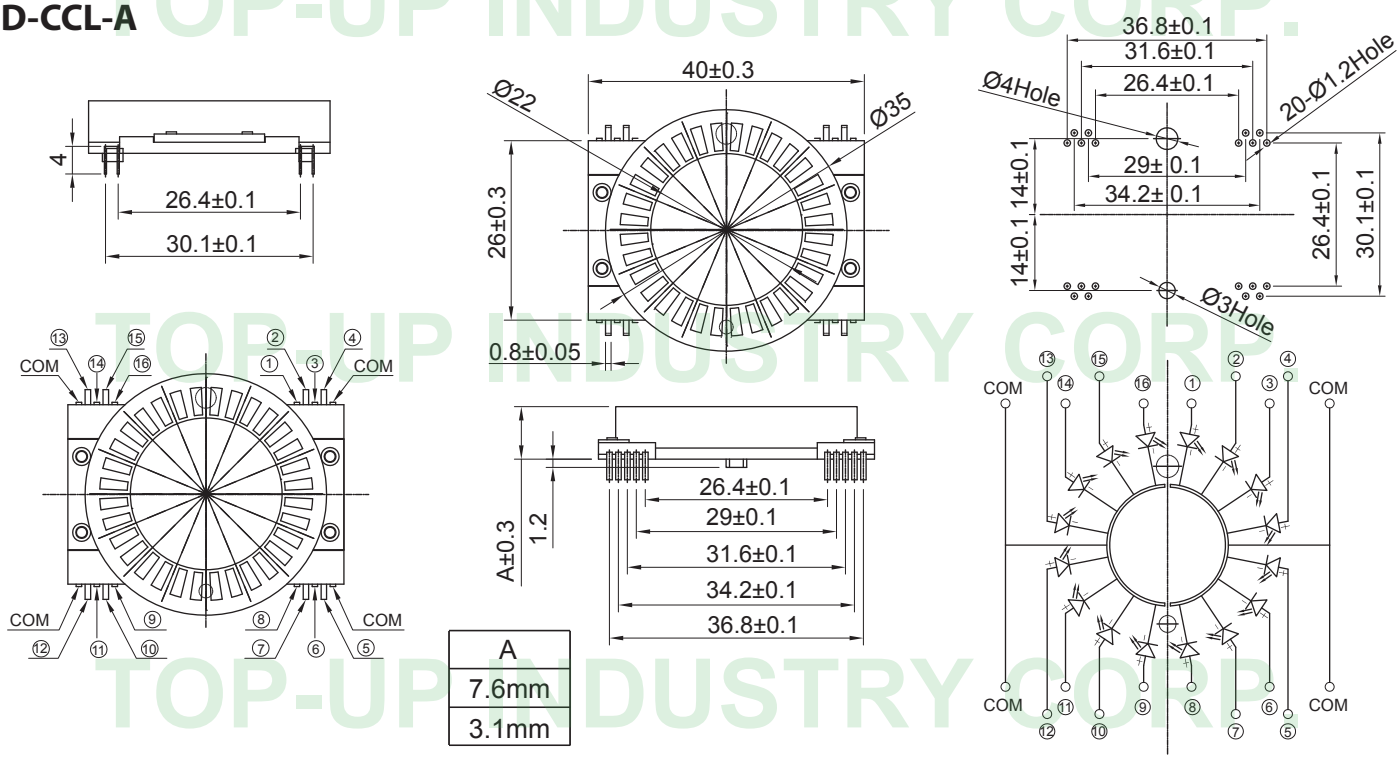

A
7.6mm
3.1mm

TOP-UP INDUSTRY CORP.

LED-CCL-AB	LED-CCL-M	LED-CCL-MB

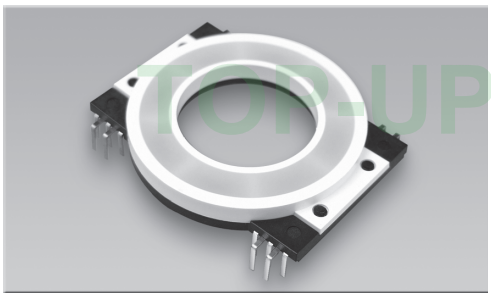
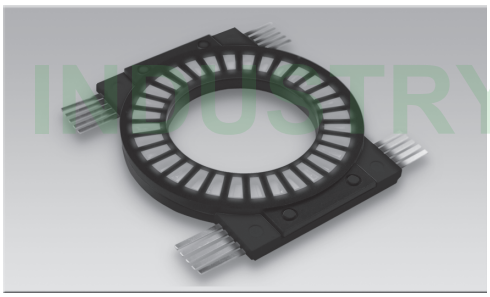
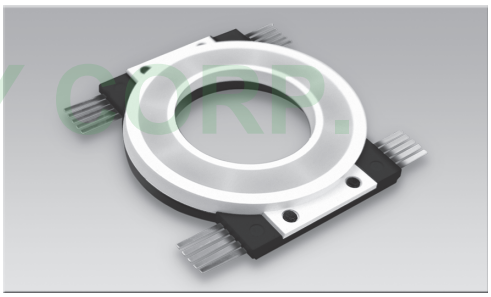

Outline Drawing | Features individual specifications

LED-CCL-AB

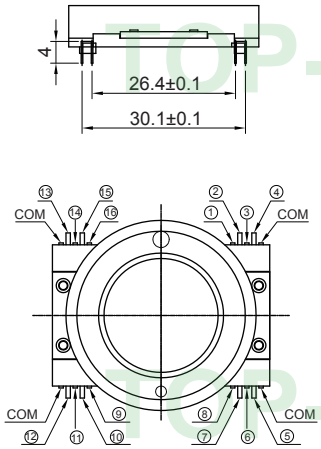

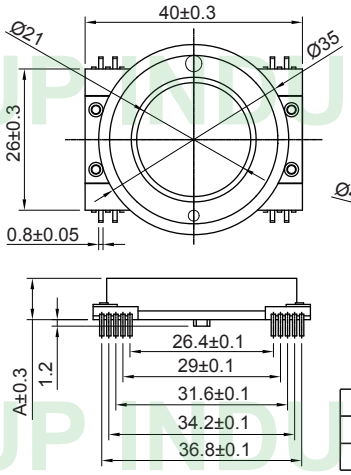

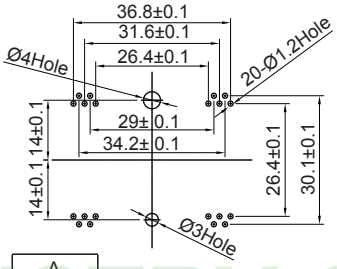

A
7.6mm
3.1mm

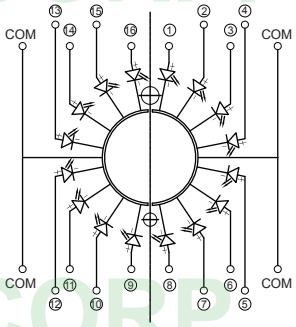

LED-CCL-M

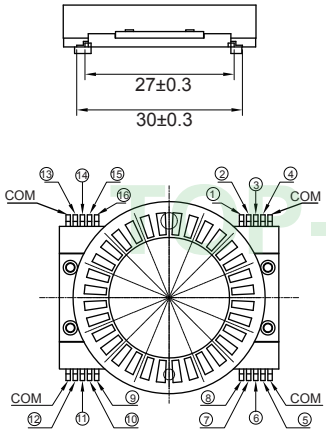

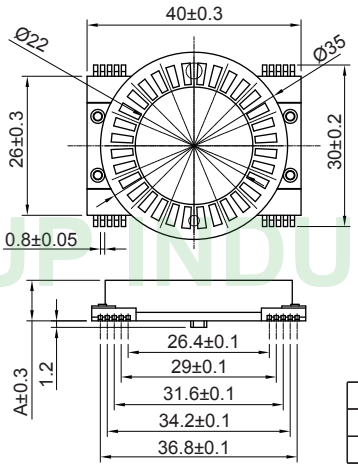

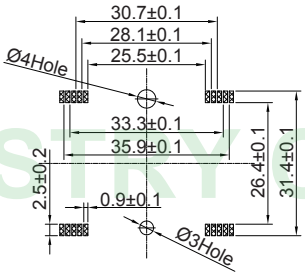

SMT TYPE

A
7.6mm
3.1mm

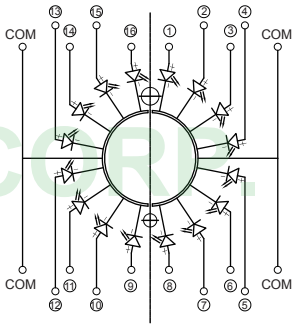

LED-CCL-MB

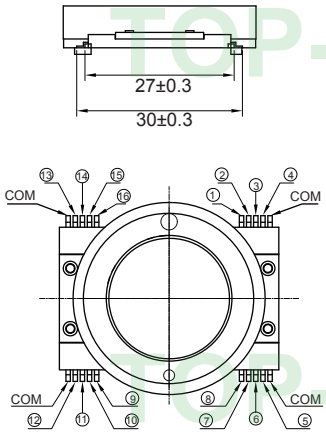

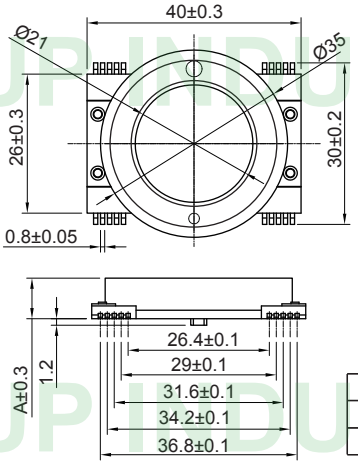

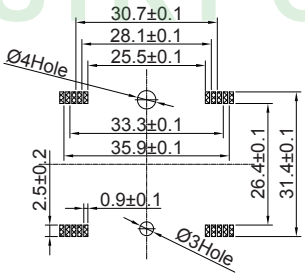

SMT TYPE

A
7.6mm
3.1mm

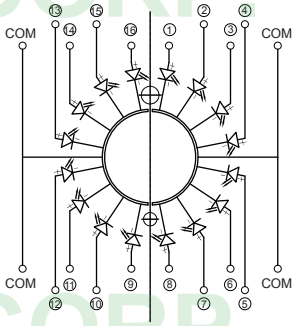

The drawing and specification are for reference only. For further detail, please contact Top-Up head office.

EC20M/EC23M Series Code Explanation

EC20M	V	F	-	D	-	14	F	-	16C	-	□□□
1	2	3		4		5	6		7		8

1. Product Lines of EC20M , EC23M
2. Vertical Type (V)
3. With Frame: "F"
4. Type of Terminal

P.C.B Type	
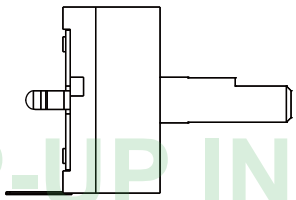	Vertical D

5. Shaft Length
6. Type of Shaft

F - Type	Hollow Shaft	
	HF	HR
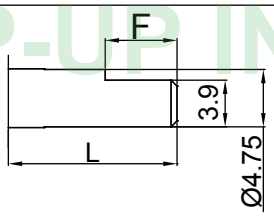	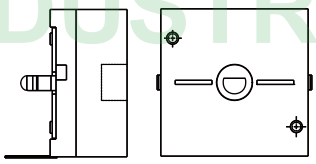	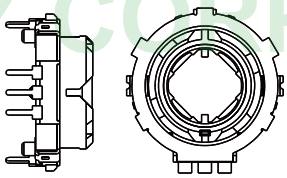

7. Number of Detent : 16C - 16 Detents
8. Series No.

TOP-UP INDUSTRY CORP.

EC20MVF-D-14F	EC20MVF-D-HF	EC23MVF-D-HR

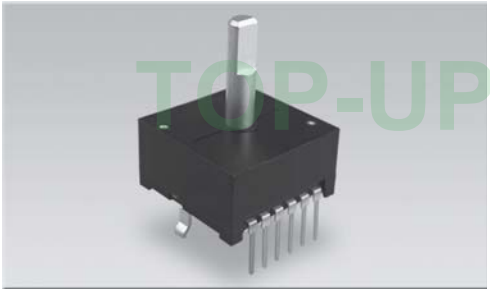

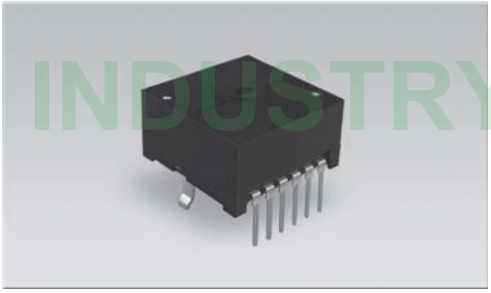

Outline Drawing | Features individual specifications

EC20MVF-D-14F

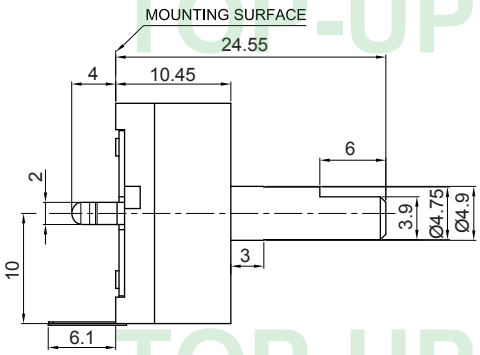

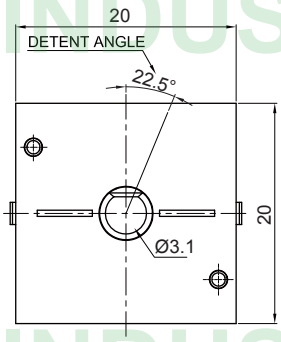

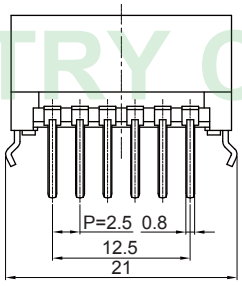

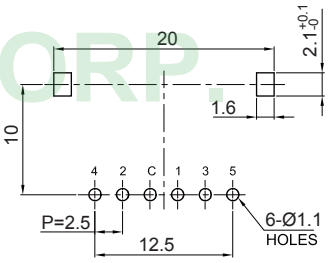

P.C.B MOUNTING DETAIL(REFERENCE)

START POSITION
C.W ROT. →

CODE

● : ON

POSITION	1	2	3	4	5	6	7	8	9	10	11	12	13	14	15	16	17	18	19	20	21	22	23	24
TERMINAL 1		●	●			●	●			●	●			●	●			●	●			●	●	
TERMINAL 2			●	●	●	●					●	●	●	●					●	●	●	●		
TERMINAL 3						●	●	●	●	●	●	●	●									●	●	●
TERMINAL 4										●	●	●	●	●	●	●	●	●	●	●	●	●	●	●
TERMINAL 5																		●	●	●	●	●	●	●

EC20MVF-D-HF

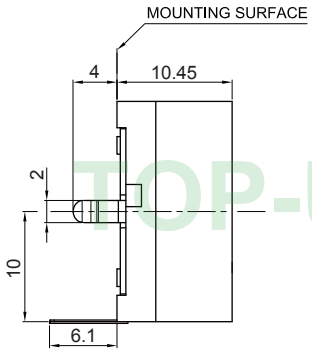

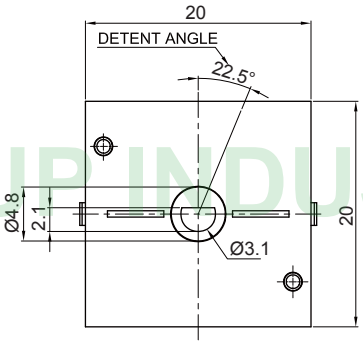

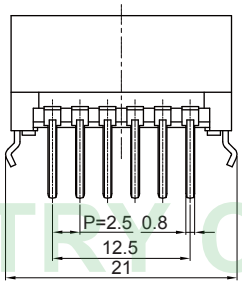

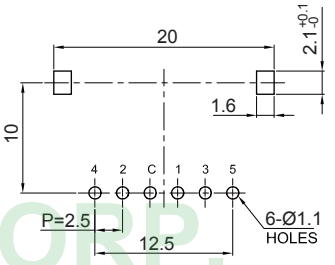

P.C.B MOUNTING DETAIL(REFERENCE)

START POSITION
C.W ROT. →

CODE

● : ON

POSITION	1	2	3	4	5	6	7	8	9	10	11	12	13	14	15	16	17	18	19	20	21	22	23	24
TERMINAL 1		●	●			●	●			●	●			●	●			●	●			●	●	
TERMINAL 2			●	●	●	●					●	●	●	●					●	●	●	●		
TERMINAL 3					●	●	●	●	●	●	●	●										●	●	●
TERMINAL 4									●	●	●	●	●	●	●	●	●	●	●	●	●	●	●	●
TERMINAL 5																		●	●	●	●	●	●	●

EC23MVF-D-HR

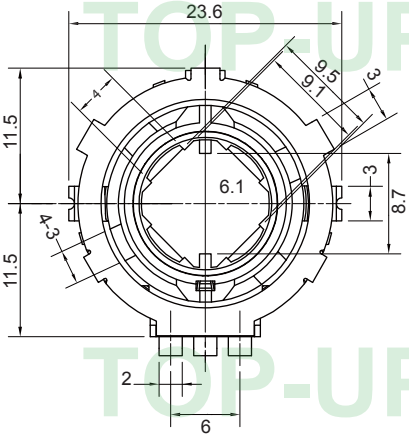

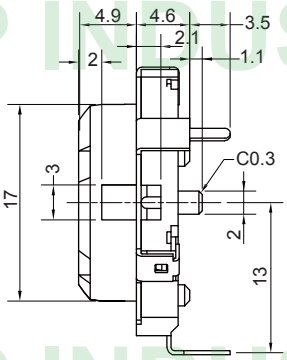

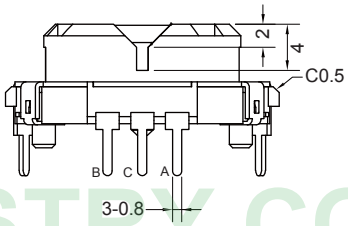

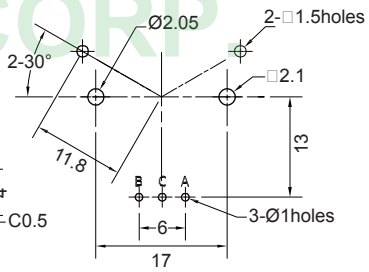

P.C.B MOUNTING DETAIL
(TOLETANCE ±0.1)
*VIEW FORM MOUNTING SIDE
P.C.B THICKNESS t=1.6mm

TOP-UP INDUSTRY CORP.

The drawing and specification are for reference only. For further detail, please contact Top-Up head office.