16mm Size Series Encoders

Low-Profile Type

TOP-UP

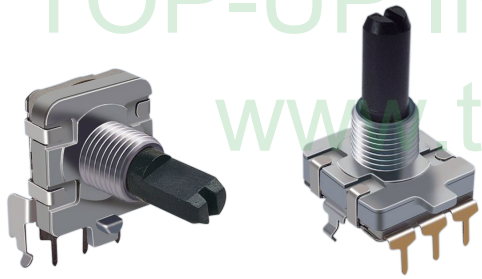

▲FEATURE
- Compact design, long life and high reliability
- Low cost compared to optical type encoders
- Available in a wide variety of configurations to meet many user requirements

▲APPLICATIONS
- Audio-visual equipment
- Consumer electric appliances
- Radios
- Musical instrumentation
- Communications equipment

TOP-UP INDUSTRY CORP.
www.top-up.com.tw

Common Specifications

Pulse	Number of detent	Phase difference (msec)	Chattering (msec)	Sliding noise (msec)	Insulation resistance	Dielectric strength	Rotational torque (gf.cm)	Rotational life (cycle)
12	0	4min.	3	2	50V DC 10MΩ MIN	50V AC 1 min	10~400 gf.cm	30,000
	12							
24	0							
	24							

Switch Specifications

Rating	Contact resistance	Insulation resistance	Dielectric strength	Contact arrangement	Travel of switch (mm)	Operating force (gf)	Operating life (cycle)
DC 5V 10mA	100mΩ	50V DC 10MΩ MIN	50V AC 1 min	PUSH ON	0.5	500±300	20,000

TOP-UP INDUSTRY CORP.
www.top-up.com.tw

TOP-UP

EC16 Series Code Explanation

EC16P	S	H	5	B	F	-	B	-	20	F	-	24	-	□C	-	□□□
1	2	3	4	5	6		7		8	9		10		11		12

TOP-UP INDUSTRY CORP.
www.top-up.com.tw

1. Product Lines of EC16P (16mm Insulated Shaft Encoder)
   EC16M (16mm Metal Shaft Encoder)
2. With Switch : S - 0.5mm
3. Horizontal (H) Type or Vertical (V) Type

H	V
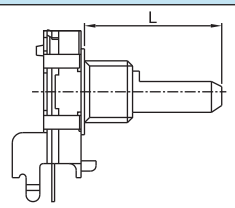	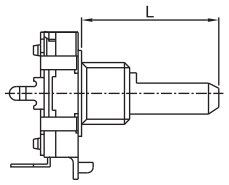

4. Bushing Length : Keep Blank On Code if it's Standard Type With 7mm.
5. With Bushing

With Screw		With Screw	
B (Standard)	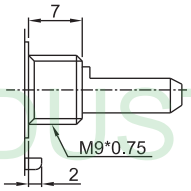	Other Type	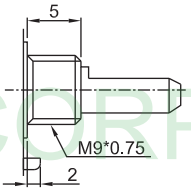

6. With Frame : F

Frame Size (Snap-in)	Horizontal	Vertical
	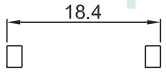	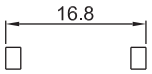

7. Type of Terminal

P.C.B Type			
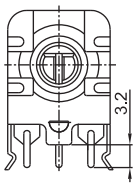	Horizontal	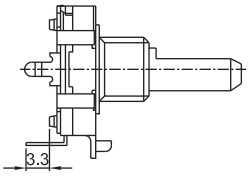	Vertical
	B		D

8. Shaft Length
9. Type of Shaft

F Type	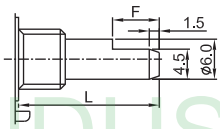	L	15	20	25
		F	7	12	12

10. Output Pulse

Code	12	24
Pulse	12 Pulses	24 Pulses

11. Number of Clicks : Blank - None, 1C - Center Click
12. Serial No.

16mm Size Series Encoders

Low-Profile Type

TOP-UP

EC16PHBF-B
W/O Switch

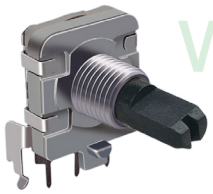

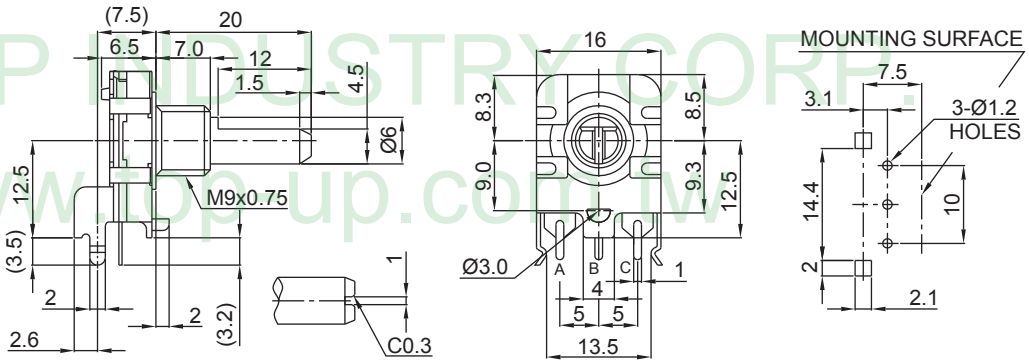

EC16PVBF-D
W/O Switch

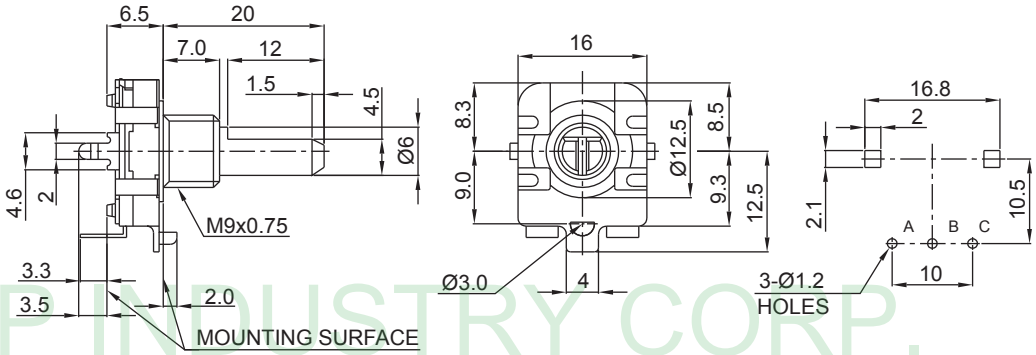

EC16PSVBF-D
W/Switch 0.5mm

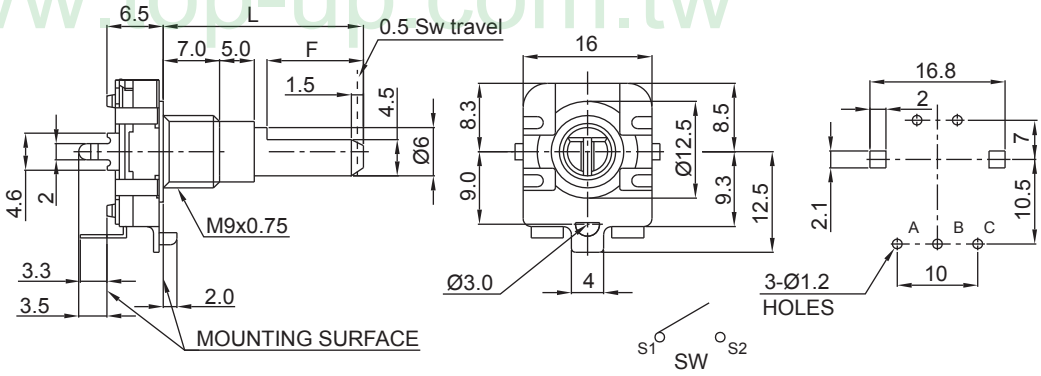

TOP-UP INDUSTRY CORP.
www.top-up.com.tw

16mm Size Series Encoders

Low-Profile Type

TOP-UP

Soldering condition

▲Manual Soldering
- Bit temperature of soldering : 350°C or less.
- Application time of soldering : within 3s.

▲Dip soldering

Preheating :
- Surface temperature of board : 100°C or less.
- Preheating time : within 1 min.

Soldering :
- Solder temperature : 260±5°C
- Immersion time : 5±1 sec.

*Apply the above soldering process for 1 or 2 times.

TOP-UP INDUSTRY CORP.

www.top-up.com.tw
www.electronicpartstaiwan.com

8F, NO.189, YUNG AN RD.,
TAOYUAN DIST.,TAOYUAN CITY 330,
TAIWAN, (R.O.C.)

TEL：+886-3-3380787
FAX：+886-3-3380767

sales@top-up.com.tw

TOP-UP INDUSTRY CORP.
www.top-up.com.tw