12mm Size Series Encoders

Luminous Shaft With LED Type

TOP-UP

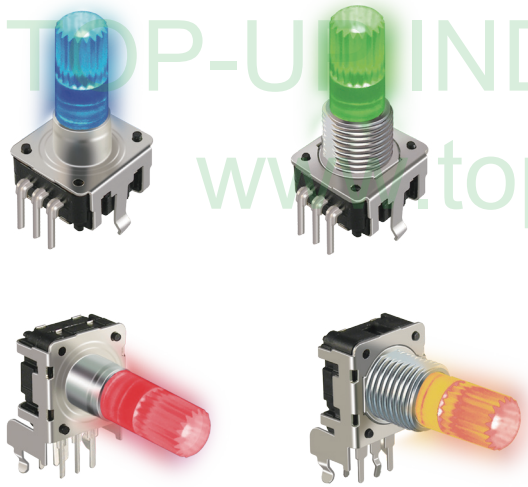

▲FEATURE

- High-precision rotary type encoder.
- Compact design, long life and high reliability.
- High brightness for working in darkness.

▲APPLICATIONS

- All kinds of level control, tuning and timer setting in audio-visual equipment, ordinary household electric appliances, radio equipment, communications equipment, etc.

Common Specifications

Pulse	Number of detent	Phase difference (msec)	Chattering (msec)	Sliding noise (msec)	Insulation resistance	Dielectric strength	Detent torque (gf•cm)	Rotational life (cycle)
12	0	4	3	2	250V DC 100MΩ MIN	300V AC 1 min	30~200 (0 DETENT: 50gf.cm max)	30,000
	12							
	24							
24	0	3.5	3	2				
	24							

Switch Specifications

Rating	Contact resistance	Insulation resistance	Dielectric strength	Contact arrangement	Travel of switch (mm)	Operating force (gf)	Operating life (cycle)
DC 5V 10mA	100mΩ	250V DC 100MΩ MIN	300V AC 1 min	PUSH ON	0.5 +0/-0.3	450±200	20,000

TOP-UP INDUSTRY CORP.
www.top-up.com.tw

TOP-UP

EC12PL Series Code Explanation

EC12PL	□□	S	D	V	B	F	A	-	D	-	20	F	T	-	12	-	12C	-	□□□
1	2	3	4	5	6	7	8		9		10	11	12		13		14		15

TOP-UP INDUSTRY CORP.
www.top-up.com.tw

1. Product Lines of EC12PL (12mm Luminous Shaft Encoder)
2. LED Color

Single Color	Code	B	R	O	D	G	L	W					
	Color	Blue	Red	Orange	Darkorange	Green	Lawngreen	White					
Dual Color	Code	BG		BO		GR		RG		GO			
	Color	Blue	Green	Blue	Orange	Green	Red	Red	Green	Green	Orange		
	Code	BR		WR		—							
	Color	Blue	Red	White	Red								
Triple Color	Code	RGB			—								
	Color	Red	Green	Blue									

3. Switch : Blank - Without Switch , S-With Switch
4. Switch Travel : D - 0.5mm
5. Horizontal or Vertical Type : H - Horizontal / V - Vertical

H	V
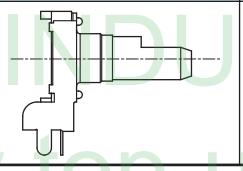	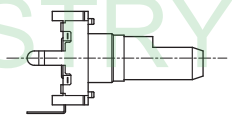

TOP-UP INDUSTRY CORP.
www.top-up.com.tw

6. With Bushing : Blank- Without Bushing ; B- with Bushing
7. With Frame : F
8. "LB" Length : Blank-5mm (Standard Type)

Horizontal	Vertical		
Standard	Standard	A	C
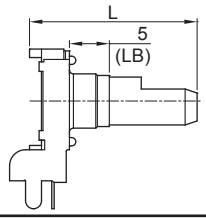	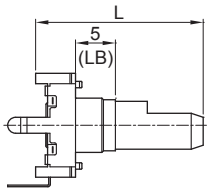	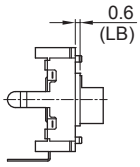	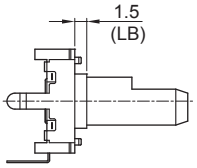

9. Type of Terminal

P.C.B Type			
	Horizontal		Vertical
	B		D
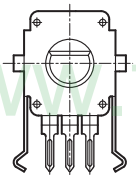		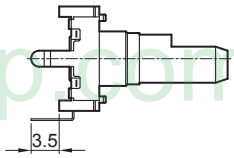	

TOP-UP INDUSTRY CORP.
www.top-up.com.tw

EC12PL Series Code Explanation

TOP-UP

EC12PL	□□	S	D	V	B	F	A	-	D	-	20	F	T	-	12	-	12C	-	□□□
1	2	3	4	5	6	7	8		9		10	11	12		13		14		15

TOP-UP INDUSTRY CORP.
www.top-up.com.tw

10. Shaft Length

11. Type of Shaft

With Single color LED						With two & three colors of LED & 0.5mm Switch Stroke					
F - Type											
Without	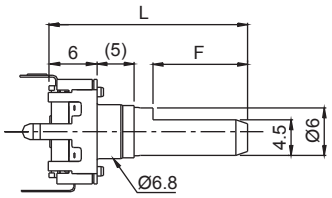					Without	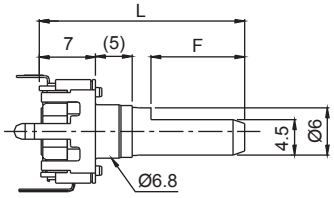				
L	17.5	20	25	30	—	L	18.8	21.3	26.3	31.3	—
F	5	7	12	12	—	F	5	7	12	12	—
With Bushing	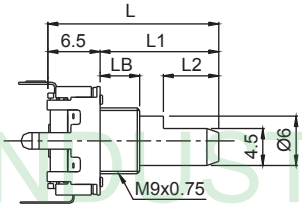					With Bushing	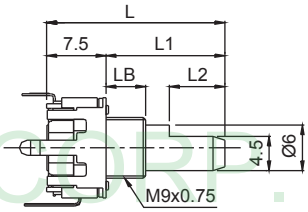				
L	17.5	20	25	30	—	L	18.8	21.3	26.3	31.3	—
LB	5	5	5	7	—	LB	5	5	5	7	—
L1	11	13.5	18.5	23.5	—	L1	11	13.5	18.5	23.5	—
L2	5	7	12	12	—	L2	5	7	12	12	—
K - Type											
Without	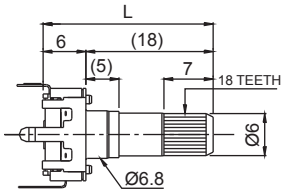					Without	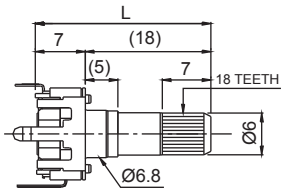				
With Bushing	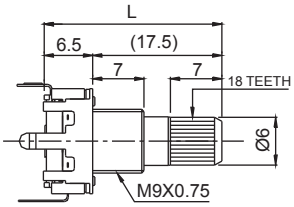					With Bushing	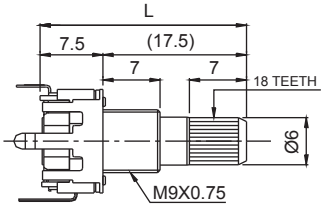				
L	20	24	-	-	-	L	21	25	-	-	-

12. Shaft Color : T - Transparent , Blank - Black

13. Output Pulse : 12 - 12Pulse , 24 - 24Pulse

14. Number of Detents : Blank- None , 12 -12C , 24 -24C

15. Serial No.

12mm Size Series Encoders

Luminous Shaft With LED Type

TOP-UP

EC12PL□HF-B
Single Color LED
W/O Bushing

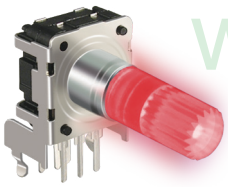

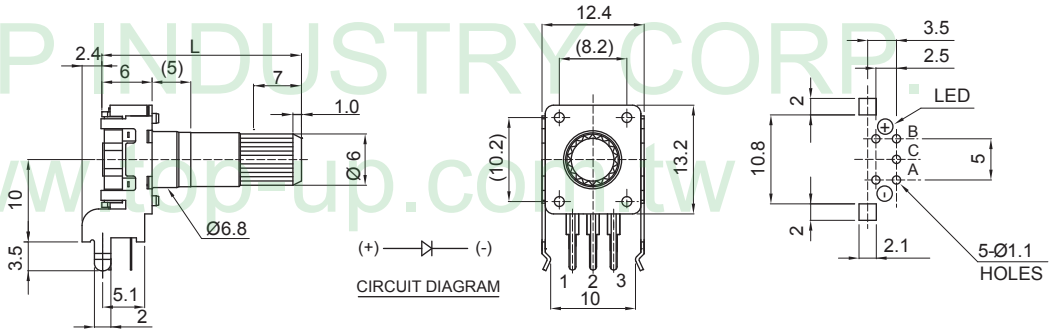

EC12PL□HBF-B
Single Color LED
With Bushing

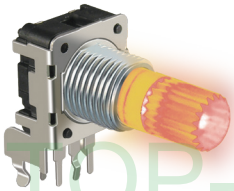

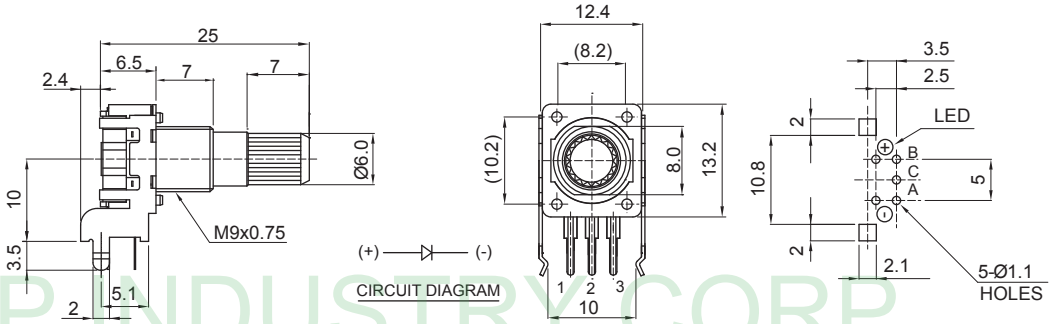

EC12PL□VF-D
Single Color LED
W/O Bushing

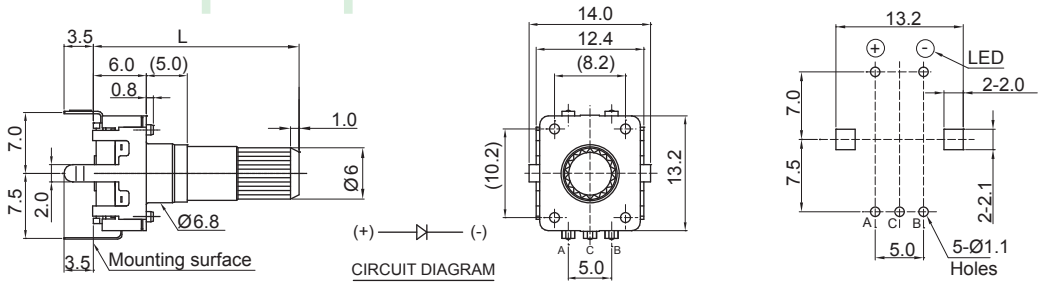

EC12PL□VBF-D
Single Color LED
With Bushing

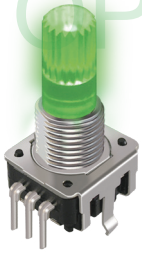

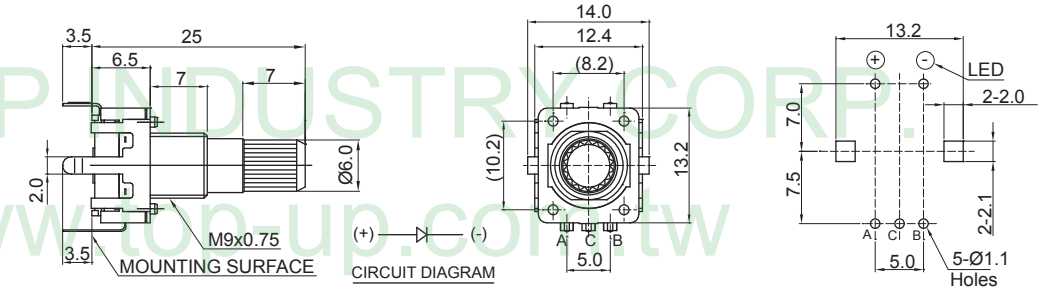

TOP-UP INDUSTRY CORP.
www.top-up.com.tw

12mm Size Series Encoders

Luminous Shaft With LED Type

TOP-UP

EC12PL□SDHF-B

Single Color LED
W/O Bushing / W/Switch

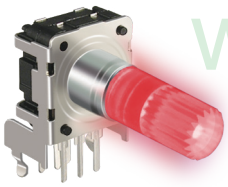

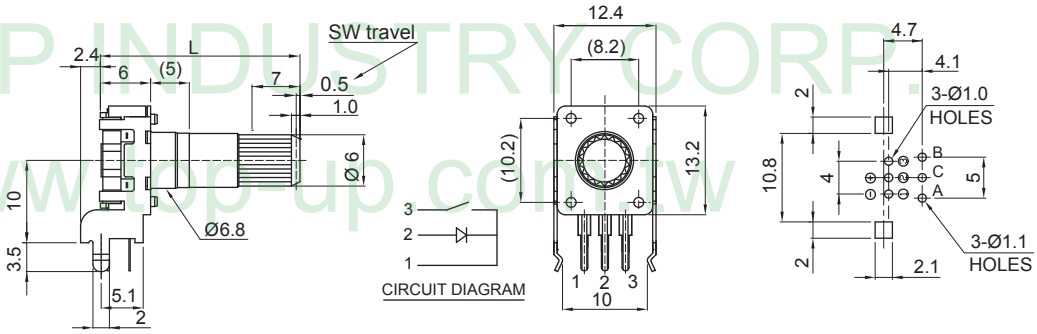

EC12PL□SDHBF-B

Single Color LED
With Bushing / W/Switch

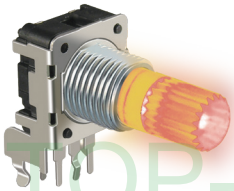

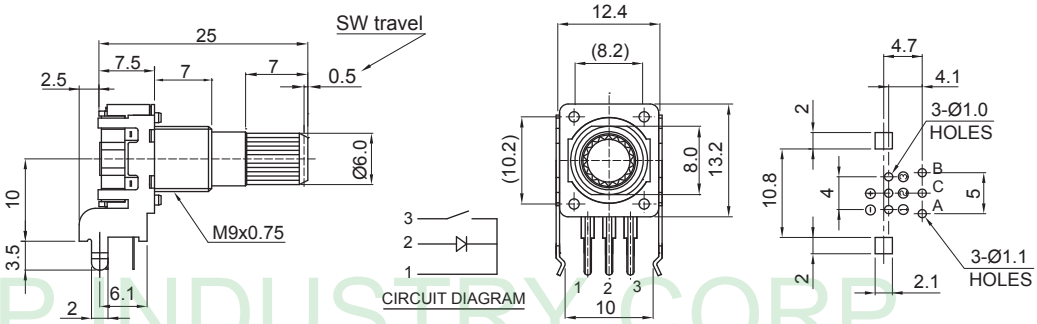

EC12PL□SDVF-D

Single Color LED
W/O Bushing / W/Switch

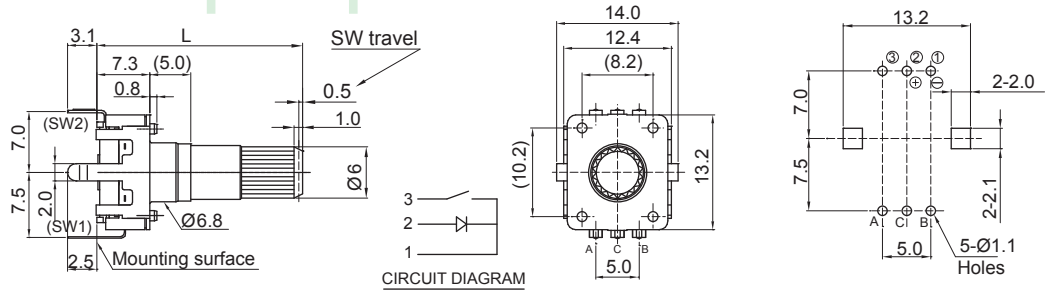

EC12PL□SDVBF-D

Single Color LED
With Bushing / W/Switch

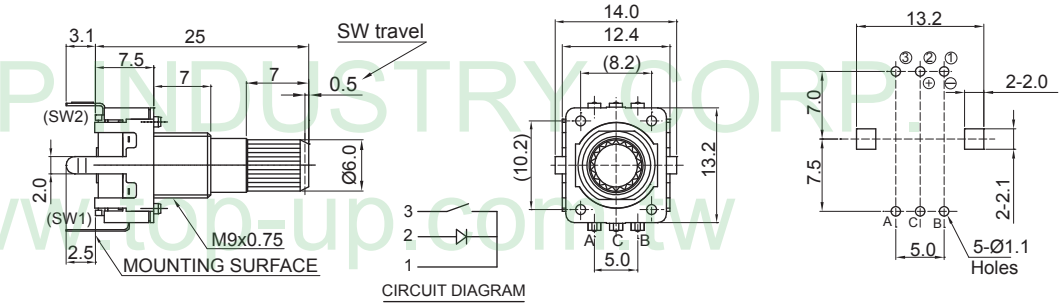

TOP-UP INDUSTRY CORP.
www.top-up.com.tw

12mm Size Series Encoders

Luminous Shaft With LED Type

TOP-UP

EC12PL□□SDHF-B

Dual Color LED
W/O Bushing / W/Switch

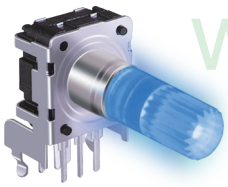

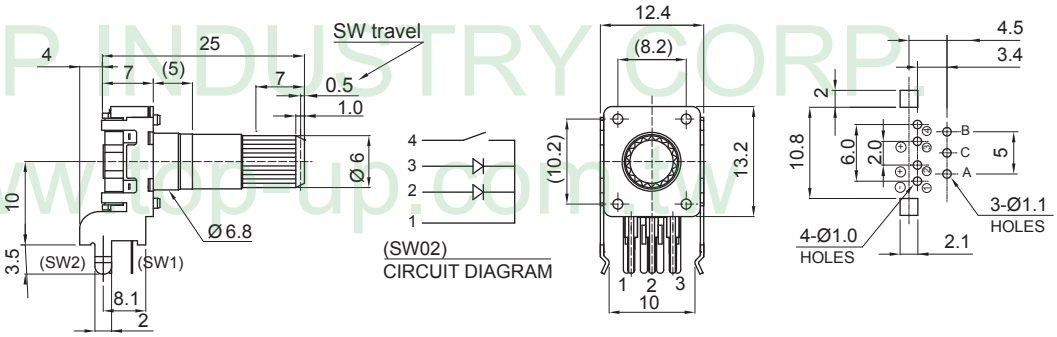

EC12PL□□SDHBF-B

Dual Color LED
With Bushing / W/Switch

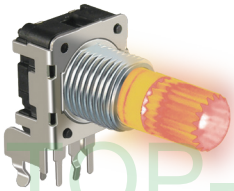

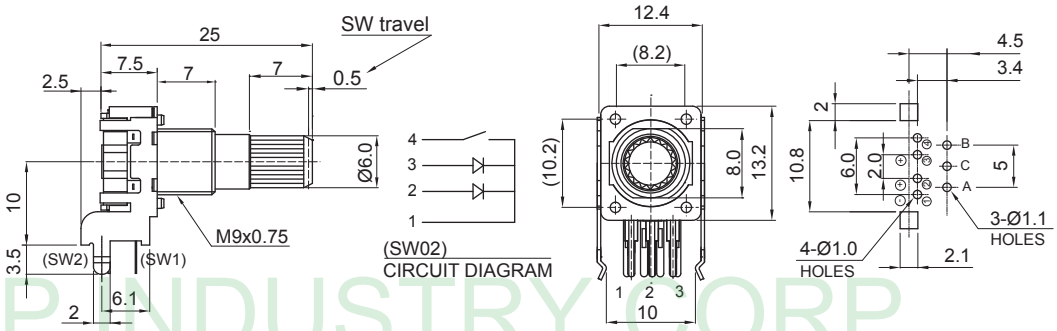

EC12PL□□SDVF-D

Dual Color LED
W/O Bushing / W/Switch

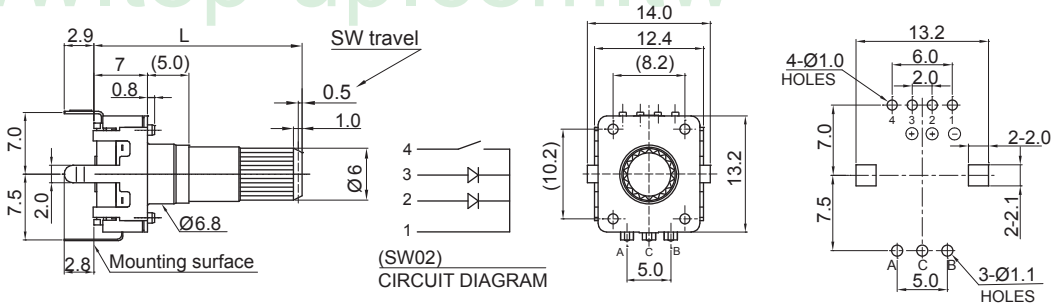

EC12PL□□SDVBF-D

Dual Color LED
With Bushing / W/Switch

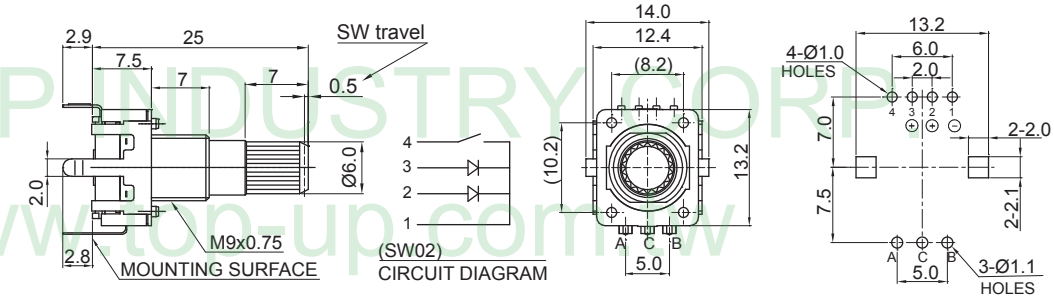

TOP-UP INDUSTRY CORP.
www.top-up.com.tw

12mm Size Series Encoders

Luminous Shaft With LED Type

TOP-UP

EC12PLRGBSDHF-B

Triple Color LED
W/O Bushing / W/Switch

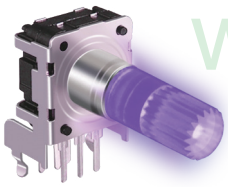

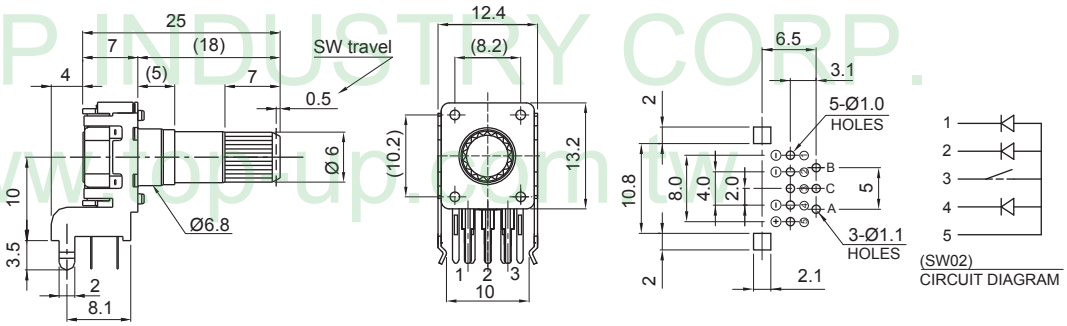

EC12PLRGBSDHBF-B

Triple Color LED
With Bushing / W/Switch

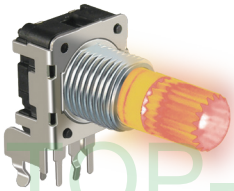

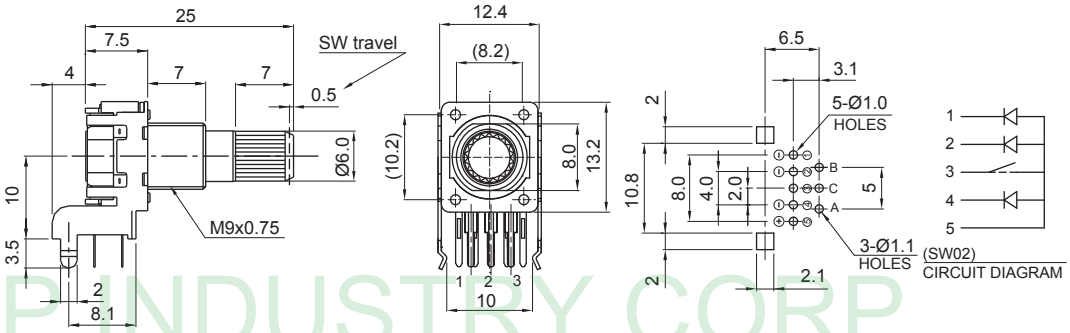

EC12PLRGBSDVF-D

Dual Color LED
W/O Bushing / W/Switch

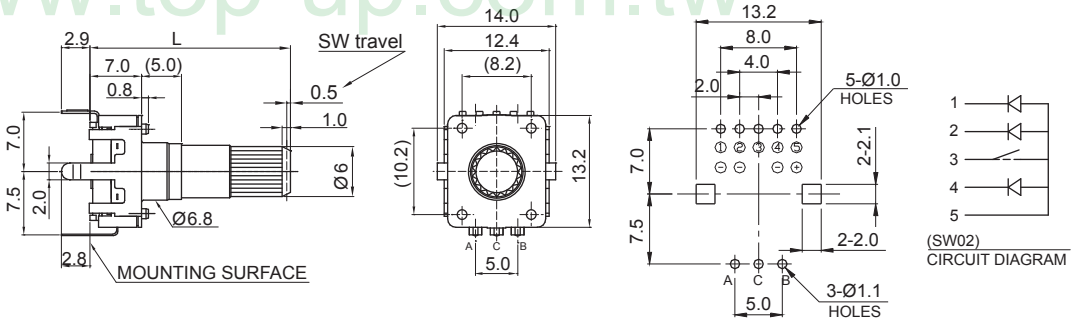

EC12PLRGBSDVBF-D

Triple Color LED
With Bushing / W/Switch

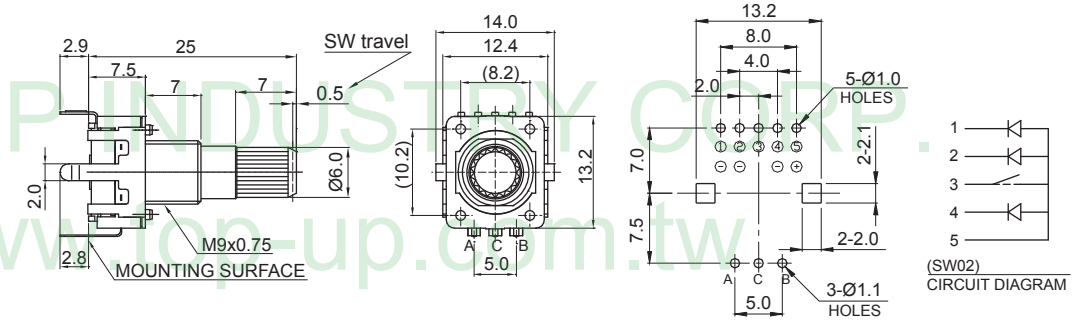

TOP-UP INDUSTRY CORP.
www.top-up.com.tw

12mm Size Series Encoders

Luminous Shaft With LED Type

TOP-UP

LED Specifications

Single color LED	Two colors LED	Three colors LED
	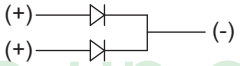	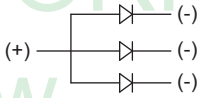
Blue	Blue / Orange	Red / Green / Blue
Red	Green / Red	
Orange	Green / Orange	
Darkorange	Blue / Red	
Green	Blue / Green	
Lawngreen	White / Red	
White	White / Green	

Soldering condition

▲Manual Soldering

- Bit temperature of soldering : 350°C or less.
- Application time of soldering : within 3s.

▲Dip soldering

Preheating :

- Surface temperature of board : 100°C or less.
- Preheating time : within 2 min.

Soldering :

- Solder temperature : 260±5°C
- Immersion time : 5±1 sec.

*Apply the above soldering process for 1 or 2 times.

TOP-UP INDUSTRY CORP.

www.top-up.com.tw
www.electronicpartstaiwan.com

8F, NO.189, YUNG AN RD.,
TAOYUAN DIST.,TAOYUAN CITY 330,
TAIWAN, (R.O.C.)

TEL：+886-3-3380787
FAX：+886-3-3380767

sales@top-up.com.tw

TOP-UP INDUSTRY CORP. www.top-up.com.tw