# 回轉式位元產生器規格書

## ROTATIONAL ENCODER SPECIFICATION

### 一,一般事項 General

1~1 適用範圍 Application

適用於電子機器的微小電流回路用之12mm迴轉式位元產生器

Application: This specification applies to 12mm size rotary encoder for microscopic current circuit, used electronic equipment.

1~2 標準狀態 Standard atmospheric conditions

若無特別規定,依下述狀態測定:

Unless otherwise specified, the standard range of atmospheric conditions for making measurements and tests is as follows.

溫　度 Ambient temperature : 15℃ to 35℃

相對濕度 Relative humidity : 25% to 85%

氣　壓 Air pressure : 86kpa to 106kpa

但如有疑問時，依下述基準狀態實施:

If there is any doubt about the results, measurements shall be made within the following:

溫　度 Ambient temperature : 20±2℃

相對濕度 Relative humidity 60% to 70%

氣　壓 Air pressure : 86kpa to 106kpa

1~3 使用溫度範圍

Operating temperature range : -10℃ to +70℃

1~4 保存溫度範圍

Storage temperature range:-40℃ to +85℃

1~5 構造, 尺寸 Construction and dimensions 依組立圖 Refer to attached drawing

1~6 額定 Rating : D.C5V 0.5mA

# 回轉式位元產生器規格書

## ROTATIONAL ENCODER SPECIFICATION

### 二. 電氣性能 Electrical Characteristics

| NO. | 項 目<br>item | 條 件<br>conditions | 規 格<br>specifications |
|---|---|---|---|
| 2-1 | 輸 出 信 號<br>output signal<br>format | < 圖一 > < fig. 1 > | A . B 二信號的輸出時間相位差, 詳細如<圖一>所示.<br>(圖中虛線表示掣子點定位置)<br>2. Phase-different signals<br>( Signal A. & signal B )<br>Details shown in < fig.1 > |
| 2-2 | 分 解 能<br>Resolution | 旋轉一圈所產生脈波數目.<br>Number of pulses in 360° rotation . | 各相24脈波/360°<br>24 pulses / 360° for each phase |

| 軸回轉方向<br>Shaft rotational direction | 信 號<br>Signal | 輸出波形 Output<br>定速旋轉 constant speed : 360° |
|---|---|---|
| 順時針方向<br>C. W. | A ( A-C 端子間 )<br>A ( Terminal A-C ) | 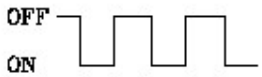 |
| | B ( B-C 端子間 )<br>B ( Terminal B-C ) | |
| 反時針方向<br>C. C. W. | A ( A-C 端子間 )<br>A ( Terminal A-C ) | |
| | B ( B-C 端子間 )<br>B ( Terminal B-C ) | |

| | | | | | APPD. | CHKD. | DSGD. | DOCUMENT NO. : | |
|---|---|---|---|---|---|---|---|---|---|
| | | | | | 廖智順 | 余 倩 | 鐘學峰 | EC12PLRVF-D-21KH-24-05/06-6H | |
| | | | | | | | | VERSION : | E |
| | | | | | | | | PAGE : | 2 OF 9 |
| SYMB | DATE | APPD | CHKD | DSGD | 2010.12.25 | 2010.12.25 | 2010.12.25 | DRAWING NO.: | EC12-020 |

# 回轉式位元產生器規格書
## ROTATIONAL ENCODER SPECIFICATION

| NO. | 項 目<br>item | 條 件<br>conditions | 規 格<br>specifications |
|---|---|---|---|
| 2–3 | 切 換 特 性<br>Switching characteristics | 切換測定回路如<圖二>所示, 以直流電壓5V, 軸回轉速度為每秒鐘回轉360°測定 .<br>Measurement shall be made under the condition as follows .<br>(1). Shaft rotational speed : 360° / S<br>(2). Test circuit : < fig. 2 > .<br>< 圖二 > < fig. 2 ><br> 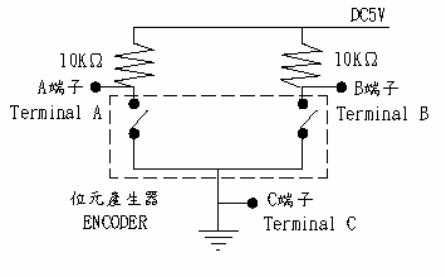 <br> | |
| 2–4 | 滑動 雜 音<br>Sliding noise | (1) 震顫雜音 Chattering<br>如〈圖三〉所示，位元由狀態OFF→ON或ON→OFF變化時,輸 出電壓在1.5V~3.5V的切換時間<br>Details shown in <fig.3> Specified by the signal's passage time from 3.5V to 1.5V or from 1.5V to 3.5V of each switching position ( code OFF→ON or ON→OFF ) .<br>注意：針對震顫雜音(t1，t3)部分，請於訊號抓取上加以遮蔽，進行過濾雜訊。<br>建議追加過濾迴路，如<圖四>所示。<br>Note：To avoid chattering( t1，t3), please consider masking time and adding C/R filters on your circuit for pulse count design, as show in <fig. 4>. | $t_1$ , $t_3$ ≦3ms |

| | | | | | APPD. | CHKD. | DSGD. | DOCUMENT NO. : | |
|---|---|---|---|---|---|---|---|---|---|
| | | | | | | | | EC12PLRVF-D-21KH-24-05/06-6H | |
| | | | | | 廖智順 | 余 倩 | 鐘學峰 | VERSION : | E |
| | | | | | | | | PAGE : | 3 OF 9 |
| SYMB | DATE | APPD | CHKD | DSGD | 2010.12.25 | 2010.12.25 | 2010.12.25 | DRAWING NO.: | EC12-020 |

# 回轉式位元產生器規格書
## ROTATIONAL ENCODER SPECIFICATION

| NO. | 項 目<br>item | 條 件<br>conditions | 規 格<br>specifications |
|---|---|---|---|
| | | (2) 跳躍雜音 Bounce<br>如<圖三>所示,位元在ON的狀態時,電壓超過1.5V以上的時間視為.當在位元ON狀態時,與震顛雜音($t_1$或$t_3$)時間間隔小于1ms時, 則該跳躍雜音視為震顛雜音的一部份 .<br>當在位元ON狀態時, 兩個跳躍雜音間的間隔小于1ms時, 則視為同一跳躍雜音 .<br>Details shown in <fig.3> .Specified by the time of voltage change exceed 1.5V in code - ON area .<br>When the bounce has code - ON time less than 1ms between chatterings ( $t_1$ or $t_3$ ) , the voltage change shall be regarded as a part of chattering .<br>When the code - ON time between 2 bounces is less than 1ms , they are regarded as 1 linked bounce . | t2 ≦ 2ms |
| | | (3) 滑動雜音 Sliding noise<br>位元OFF狀態時的電壓變動 .<br>The voltage change in code-OFF area | 3.5V 以上<br>3.5V Min. |

<圖三> <fig. 3>

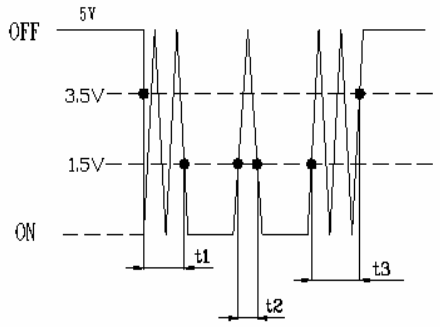


<圖四> <fig. 4>

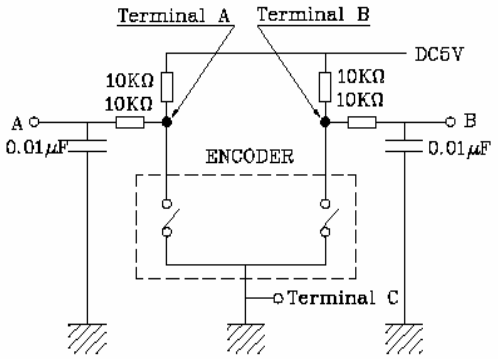


(t1,t3):Masking time to avoid chattering
位元OFF狀態 ： 輸出電壓3.5V以上的狀態稱之 .
位元ON狀態： 輸出電壓1.5V以下的狀態稱之 .
Code - OFF area : The area which the voltage is 3.5V or more .
Code - ON area : The area which the voltage is 1.5 V or less .

| | | | | | APPD. | CHKD. | DSGD. | DOCUMENT NO. : | |
|---|---|---|---|---|---|---|---|---|---|
| | | | | | | | | EC12PLRVF-D-21KH-24-05/06-6H | |
| | | | | | 廖智順 | 余 倩 | 鐘學峰 | VERSION : | E |
| | | | | | | | | PAGE : | 4 OF 9 |
| SYMB | DATE | APPD | CHKD | DSGD | 2010.12.25 | 2010.12.25 | 2010.12.25 | DRAWING NO.: | EC12-020 |

# 回轉式位元產生器規格書
## ROTATIONAL ENCODER SPECIFICATION

| NO. | 項　目<br>item | 條　件<br>conditions | 規　格<br>specifications |
|---|---|---|---|
| 2–5 | 相位差<br>Phase-difference | 以定速每秒鐘旋轉360°測定之 .<br>Measurement shall be made under the condition which the shaft is rotated in 360° /S (constant speed )<br> 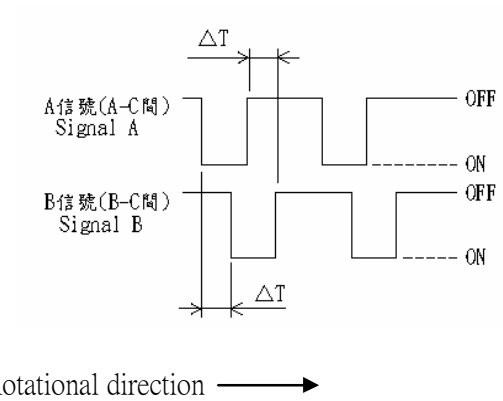 <br> | 如圖五所示，ΔT ≧ 3.5msec<br>in < fig. 5> |
| | | 注意事項 :※2.4-2.5之規格，為360° /秒等速下運轉檢測之，與手動旋轉會有所不同。<br>※與韌體程式之搭配性，請實際使用測試確認之。<br>Note : ※The test is conducted with equipment at constant speed: 360°/S according to Spec. Item 2.4 & 2.5, and the test result could be different from the result by manual test.<br>※In order to prove the interoperability between the firmware and the encoder, please test the part in real condition. | |
| 2–6 | 絕緣阻抗<br>Insulation resistance | 外加電壓250V D.C於取固定板與任一端子間.<br>Measurement shall be made under the condition which a voltage of 250V D.C is applied between individual terminals and attaching plate. | 固定板與端子間100MΩ以上.<br>Between individual terminals and attaching plate.<br>100MΩ MIN . |
| 2-7 | 耐電壓強度<br>Dielectric strength | 於固定板與任一端子間外加電壓300VA.C.1分鐘或 360V A.C. 2 秒鐘測定<br>A voltage of 300V A.C. shall be applied for 1 min or a voltage of 360 VA.C. shall be applied for 2 sec between individual terminals and attaching plate. ( Leak current : 1mA ) | 無損傷,短路及絕緣破壞現象 .<br>Without damage to parts arcing or breakdown . |

| | | | | | APPD. | CHKD. | DSGD. | DOCUMENT NO. : | |
|---|---|---|---|---|---|---|---|---|---|
| | | | | | | | | EC12PLRVF-D-21KH-24-05/06-6H | |
| | | | | | 廖智順 | 余 倩 | 鐘學峰 | VERSION : | E |
| | | | | | | | | PAGE : | 5 OF 9 |
| SYMB | DATE | APPD | CHKD | DSGD | 2010.12.25 | 2010.12.25 | 2010.12.25 | DRAWING NO.: | EC12-020 |

# 回轉式位元產生器規格書

## ROTATIONAL ENCODER SPECIFICATION

### 三. 機械性能 Mechanical characteristics

| NO. | 項 目<br>item | 條 件<br>conditions | 規 格<br>specifications |
|---|---|---|---|
| 3–1 | 全回轉角度<br>Total rotational angle | | 360° 回轉<br>360° ( Endless ) |
| 3–2 | 回轉轉距<br>Rotational torque | | 50gf.cm以下 (MAX) |
| 3–3 | 端 子 強 度<br>Terminal strength | 外加靜重300gf之力于端子前端之任意方向1分鐘.<br>A static load of 300gf shall be applied to the tip of terminals for 1 minute in any direction . | 端子無損壞或顯著松動, 但是端子可允許彎曲 .<br>Without damage or excessive looseness of terminals<br>Terminals bend is permitted |
| 3–4 | 軸擠壓引張強度<br>Push - pull strength of shaft | 在軸之方向加壓力或張力之靜負荷5Kgf 10秒（實裝狀態）.<br>Push and pull static load of 5Kgf shall be applied to the shaft in the axial direction for 10sec .( After soldering of the PC board ) | 不可有電氣或機械上的異常<br>Without damage to or excessive play in shaft .No excessive abnormality in rotational feeling. |
| 3-5 | 軸 松 動<br>Shaft wobble | 軸前端處加上500gf.cm之力矩 .<br>A momentary load of 500gf.cm shall be applied at the point from the tip of the shaft in a direction perpendicular to the axis of shaft . | 1.0xL/30 mmp-p以下（MAX)<br>L：軸的固定長度。<br>L:Shaft Length |

| | | | | | APPD. | CHKD. | DSGD. | DOCUMENT NO. : | |
|---|---|---|---|---|---|---|---|---|---|
| | | | | | 廖智順 | 余 倩 | 鐘學峰 | EC12PLRVF-D-21KH-24-05/06-6H | |
| | | | | | | | | VERSION : | E |
| | | | | | | | | PAGE : | 6 OF 9 |
| SYMB | DATE | APPD | CHKD | DSGD | 2010.12.25 | 2010.12.25 | 2010.12.25 | DRAWING NO.: | EC12-020 |

# 回轉式位元產生器規格書

## ROTATIONAL ENCODER SPECIFICATION

| NO. | 項　目<br>item | 條　件<br>conditions | 規　格<br>specifications |
|---|---|---|---|
| 3-6 | 軸垂直側壓強度<br>Side thrust<br>Strength of shaft | 軸前端5mm處,加上2Kgf的靜荷重10秒.<br>A load of 2Kgf shall be applied at the point 5mm from the tip of the shaft in a direction perpendicular to the axis of shaft.(After soldering of PC board) | 不可有電氣或機械上的異常<br>Without damage to or excessive play in shaft .No excessive abnormality in rotational feeling. |

四. 耐久性能　**Endurance characteristics**

| NO. | 項　目<br>item | 條　件<br>conditions | 規　格<br>specifications |
|---|---|---|---|
| 4-1 | 回轉壽命<br>Rotational life | 無任何電氣負荷下,軸以每小時600~1000回轉的速度下,持續進行30,000回轉.<br>(1回轉為360°往返各一次)<br>The shaft of encoder shall be rotated to 30,000cycles at a speed of 600~1000 cycles per hour without electrical load , after which measurement shall be made .<br>(1 cycle： rotate 360°C.C.W. rotate 360° C.W.) | 震顫雜音: t1,t3≦5mS<br>跳躍滑動雜音: t2≦3mS<br>相位差: △T≧2.5msec<br>其它初期值亦需滿足。<br>Chattering: t1,t3≦5ms<br>Bounce: t2≦3ms<br>Phase-difference:△T≧2.5msec<br>Except above items.<br>specifications in clause<br>2.1~7 and 3.1~6 shall be satisfied. |

### 五. 焊錫耐熱性 Soldering condition

| NO. | 項 目<br>item | 條 件<br>conditions | 規 格<br>specifications |
|---|---|---|---|
| 5–1 | 人 工 手 焊<br>Manual Soldering | 溫度350℃以下, 時間3秒鐘以內 .<br>Bit temperature of soldering : 350℃ or less<br>Application time of soldering : 3sec. Max. | 不可發生絕緣體變形, 破損以及感觸異常 .<br>There shall be no deformation or cracks in molded part . No excessive abnormality in rotational feeling . |
| 5–2 | 自 動 焊 錫<br>Dip soldering | 使用基板 : t1.6兩面銅泊積層板 .<br>Printed wiring board : Single-sided copper clad laminate board with thickness of 1.6mm .<br>助焊劑：發泡式助焊機內置比重0.82以上的助焊劑發泡面高度為基板板厚之2/3。<br>Flux：<br>＊Specific gravity: 0.82 or more.<br>＊Flux shall be applied to the board using a bubble foaming type fluxed.<br>＊The board shall be soaked in the flux bubble only to the 2/3 of its thickness.<br>預熱條件:基板表面溫度100°C以下，時間2分鐘以內<br>Preheating：<br>＊Surface temperature of board：100°C or less.<br>＊Preheating time: within 2 min.<br>焊錫爐條件：溫度260±5°C，時間5±1秒。<br>Soldering：<br>＊Solder temperature：260±5°C<br>＊Immersion time：5±1 sec.<br>以上工程以一次或兩次為宜。<br>Apply the above soldering process for 1 or 2 times. | |

# L. E. D. 共通規格書

# L. E. D. COMMON SPECIFICATIONS

**一. 回路: Circuit:**

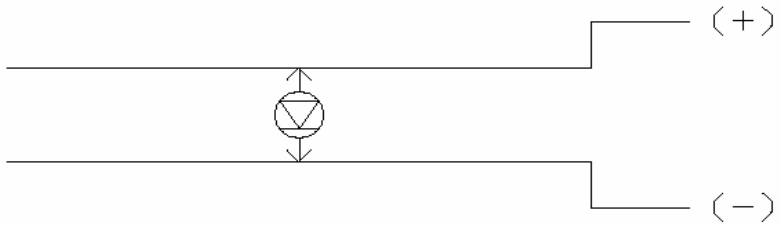


二. LED 特性

1. 反轉電壓 Reverse Voltage: 5V

2

| 發光色 Emitted color | 功率消耗 Power dissipation | 直流正向電流 DC Forward Current | 試驗條件 Test conditions TF=20mA | |
|---|---|---|---|---|
| | | | 直流順電壓 Forward voltage(V) | |
| | | | 標准值 Typ | 以下 MAX |
| 紅 色 Red | 60mW | 30mA | 1.8 | 2.6 |
| 草綠色 Lawngreen | 100mW | 30mA | 2 | 2.6 |
| 藍色 Blue | 72mW | 20mA | 3.2 | 3.6 |
| 橙 色 0range | 100mW | 30mA | 2.1 | 2.6 |
| 白 色 White | 72mW | 20mA | 3.2 | 3.6 |
| 綠色 Green | 72mW | 20mA | 3.2 | 3.6 |
| 深橙色 Darkorange | 100mW | 30mA | 2.1 | 2.6 |

**ROHS COMPLIANCE**

| | | | | | APPD. | CHKD. | DSGD. | DOCUMENT NO. : | |
|---|---|---|---|---|---|---|---|---|---|
| | | | | | 廖智順 | 余 倩 | 鐘學峰 | EC12PLRVF-D-21KH-24-05/06-6H | |
| | | | | | | | | VERSION : | E |
| | | | | | | | | PAGE : | 9 OF 9 |
| SYME | DATE | APPD | CHKD | DSGD | 2010.12.25 | 2010.12.25 | 2010.12.25 | DRAWING NO.: | EC12-020 |