回轉式位元產生器規格書

ROTATIONAL ENCODER SPECIFICATION

一,一般事項 General

1~1 適用範圍 Application

適用於電子機器的微小電流回路用之12mm迴轉式位元產生器

Application: This specification applies to 12mm size rotary encoder for microscopic current circuit, used electronic equipment.

1~2 標準狀態 Standard atmospheric conditions

若無特別規定,依下述狀態測定:

Unless otherwise specified, the standard range of atmospheric conditions for making measurements and tests is as follows.

溫 度 Ambient temperature : 15℃ to 35℃

相對濕度 Relative humidity : 25% to 85%

氣 壓 Air pressure : 86kpa to 106kpa

但如有疑問時，依下述基準狀態實施:

If there is any doubt about the results, measurements shall be made within the following:

溫 度 Ambient temperature : 20±2℃

相對濕度 Relative humidity 60% to 70%

氣 壓 Air pressure : 86kpa to 106kpa

1~3 使用溫度範圍

Operating temperature range : -10℃ to +70℃

1~4 保存溫度範圍

Storage temperature range:-40℃ to +85℃

1~5 構造, 尺寸 Construction and dimensions 依組立圖 Refer to attached drawing

1~6 額定 Rating : D.C5V 0.5mA

回轉式位元產生器規格書

ROTATIONAL ENCODER SPECIFICATION

二. 電氣性能 Electrical Characteristics

NO.	項 目 item	條 件 conditions	規 格 specifications
2-1	輸 出 信 號 output signal format	< 圖一 > < fig. 1 >	A . B 二信號的輸出時間相位差, 詳細如<圖一>所示. (圖中虛線表示掣子點定位置) 2. Phase-different signals (Signal A. & signal B) Details shown in < fig.1 >
2-2	分 解 能 Resolution	旋轉一圈所產生脈波數目. Number of pulses in 360° rotation .	各相24脈波/360° 24 pulses / 360° for each phase

軸回轉方向 Shaft rotational direction	信 號 Signal	輸出波形 Output 定速旋轉 constant speed : 360°
順時針方向 C. W.	A (A-C 端子間) A (Terminal A-C)	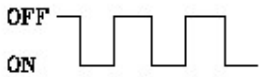
	B (B-C 端子間) B (Terminal B-C)	
反時針方向 C. C. W.	A (A-C 端子間) A (Terminal A-C)	
	B (B-C 端子間) B (Terminal B-C)	

					APPD.	CHKD.	DSGD.	DOCUMENT NO. :	
								EC12PLBOVF-D-22KH-24-05/07-6H	
					余 倩	余 倩	余 倩	VERSION :	A
								PAGE :	2 OF 9
SYMB	DATE	APPD	CHKD	DSGD	2012.1.11	2012.1.11	2012.1.11	DRAWING NO.:	EC12-031

回轉式位元產生器規格書
ROTATIONAL ENCODER SPECIFICATION

NO.	項 目 item	條 件 conditions	規 格 specifications
2–3	切 換 特 性 Switching characteristics	切換測定回路如<圖二>所示, 以直流電壓5V, 軸回轉速度為每秒鐘回轉360°測定 . Measurement shall be made under the condition as follows . (1). Shaft rotational speed : 360° / S (2). Test circuit : < fig. 2 > . < 圖二 > < fig. 2 > 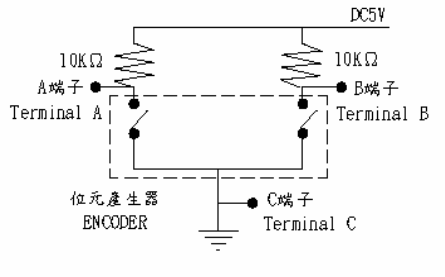 	
2–4	滑動 雜 音 Sliding noise	(1) 震顫雜音 Chattering 如〈圖三〉所示，位元由狀態OFF→ON或ON→OFF變化時,輸 出電壓在1.5V~3.5V的切換時間 Details shown in <fig.3> Specified by the signal's passage time from 3.5V to 1.5V or from 1.5V to 3.5V of each switching position (code OFF→ON or ON→OFF) . 注意：針對震顫雜音(t1，t3)部分，請於訊號抓取上加以遮蔽，進行過濾雜訊。 建議追加過濾迴路，如<圖四>所示。 Note：To avoid chattering(t1，t3), please consider masking time and adding C/R filters on your circuit for pulse count design, as show in <fig. 4>.	t_1 , t_3 ≦3ms

					APPD.	CHKD.	DSGD.	DOCUMENT NO. :	
								EC12PLBOVF-D-22KH-24-05/07-6H	
					余 倩	余 倩	余 倩	VERSION :	A
								PAGE :	3 OF 9
SYMB	DATE	APPD	CHKD	DSGD	2012.1.11	2012.1.11	2012.1.11	DRAWING NO.:	EC12-031

回轉式位元產生器規格書
ROTATIONAL ENCODER SPECIFICATION

NO.	項　目 item	條　件 conditions	規　格 specifications
		(2) 跳躍雜音 Bounce 如<圖三>所示,位元在ON的狀態時,電壓超過1.5V以上的時間視為.當在位元ON狀態時,與震顛雜音(t_1或t_3)時間間隔小于1ms時, 則該跳躍雜音視為震顛雜音的一部份 . 當在位元ON狀態時, 兩個跳躍雜音間的間隔小于1ms時, 則視為同一跳躍雜音 . Details shown in <fig.3> .Specified by the time of voltage change exceed 1.5V in code - ON area . When the bounce has code - ON time less than 1ms between chatterings (t_1 or t_3) , the voltage change shall be regarded as a part of chattering . When the code - ON time between 2 bounces is less than 1ms , they are regarded as 1 linked bounce .	t2 ≦ 2ms
		(3) 滑動雜音 Sliding noise 位元OFF狀態時的電壓變動 . The voltage change in code-OFF area	3.5V 以上 3.5V Min.

<圖三> <fig. 3>

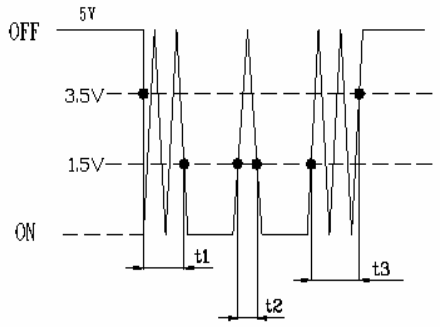

<圖四> <fig. 4>

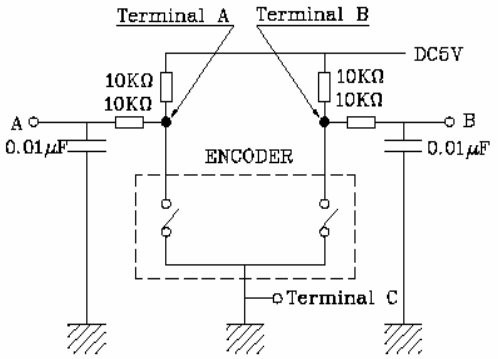

(t1,t3):Masking time to avoid chattering
位元OFF狀態 ： 輸出電壓3.5V以上的狀態稱之 .
位元ON狀態： 輸出電壓1.5V以下的狀態稱之 .
Code - OFF area : The area which the voltage is 3.5V or more .
Code - ON area : The area which the voltage is 1.5 V or less .

					APPD.	CHKD.	DSGD.	DOCUMENT NO. :	
					余倩	余倩	余倩	EC12PLBOVF-D-22KH-24-05/07-6H	
								VERSION :	A
								PAGE :	4 OF 9
SYMB	DATE	APPD	CHKD	DSGD	2012.1.11	2012.1.11	2012.1.11	DRAWING NO.:	EC12-031

回轉式位元產生器規格書
ROTATIONAL ENCODER SPECIFICATION

NO.	項　目 item	條　件 conditions	規　格 specifications
2–5	相位差 Phase-difference	以定速每秒鐘旋轉360°測定之 . Measurement shall be made under the condition which the shaft is rotated in 360° /S (constant speed) 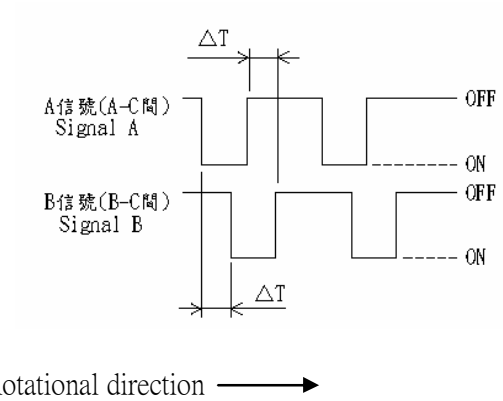 	如圖五所示，ΔT ≧ 3.5msec in < fig. 5>
		注意事項 :※2.4-2.5之規格，為360° /秒等速下運轉檢測之，與手動旋轉會有所不同。 ※與韌體程式之搭配性，請實際使用測試確認之。 Note : ※The test is conducted with equipment at constant speed: 360°/S according to Spec. Item 2.4 & 2.5, and the test result could be different from the result by manual test. ※In order to prove the interoperability between the firmware and the encoder, please test the part in real condition.	
2–6	絕緣阻抗 Insulation resistance	外加電壓250V D.C於取固定板與任一端子間. Measurement shall be made under the condition which a voltage of 250V D.C is applied between individual terminals and attaching plate.	固定板與端子間100MΩ以上. Between individual terminals and attaching plate. 100MΩ MIN .
2-7	耐電壓強度 Dielectric strength	於固定板與任一端子間外加電壓300VA.C.1分鐘或 360V A.C. 2 秒鐘測定 A voltage of 300V A.C. shall be applied for 1 min or a voltage of 360 VA.C. shall be applied for 2 sec between individual terminals and attaching plate. (Leak current : 1mA)	無損傷,短路及絕緣破壞現象 . Without damage to parts arcing or breakdown .

回轉式位元產生器規格書

ROTATIONAL ENCODER SPECIFICATION

三. 機械性能 Mechanical characteristics

NO.	項 目 item	條 件 conditions	規 格 specifications
3–1	全回轉角度 Total rotational angle		360° 回轉 360° (Endless)
3–2	回轉轉距 Rotational torque		50gf.cm以下 (MAX)
3–3	端 子 強 度 Terminal strength	外加靜重300gf之力于端子前端之任意方向1分鐘. A static load of 300gf shall be applied to the tip of terminals for 1 minute in any direction .	端子無損壞或顯著松動, 但是端子可允許彎曲 . Without damage or excessive looseness of terminals Terminals bend is permitted
3–4	軸擠壓引張強度 Push - pull strength of shaft	在軸之方向加壓力或張力之靜負荷5Kgf 10秒（實裝狀態）. Push and pull static load of 5Kgf shall be applied to the shaft in the axial direction for 10sec .(After soldering of the PC board)	不可有電氣或機械上的異常 Without damage to or excessive play in shaft .No excessive abnormality in rotational feeling.
3-5	軸 松 動 Shaft wobble	軸前端處加上500gf.cm之力矩 . A momentary load of 500gf.cm shall be applied at the point from the tip of the shaft in a direction perpendicular to the axis of shaft .	1.0xL/30 mmp-p以下（MAX) L：軸的固定長度。 L:Shaft Length

					APPD.	CHKD.	DSGD.	DOCUMENT NO. :	
					余倩	余倩	余倩	EC12PLBOVF-D-22KH-24-05/07-6H	
								VERSION :	A
								PAGE :	6 OF 9
SYMB	DATE	APPD	CHKD	DSGD	2012.1.11	2012.1.11	2012.1.11	DRAWING NO.:	EC12-031

回轉式位元產生器規格書
ROTATIONAL ENCODER SPECIFICATION

NO.	項 目 item	條 件 conditions	規 格 specifications
3-6	軸垂直側壓強度 Side thrust Strength of shaft	軸前端5mm處,加上2Kgf的靜荷重10秒. A load of 2Kgf shall be applied at the point 5mm from the tip of the shaft in a direction perpendicular to the axis of shaft.(After soldering of PC board)	不可有電氣或機械上的異常 Without damage to or excessive play in shaft .No excessive abnormality in rotational feeling.

四. 耐久性能 Endurance characteristics

NO.	項 目 item	條 件 conditions	規 格 specifications
4-1	回轉壽命 Rotational life	無任何電氣負荷下,軸以每小時600~1000回轉的速度下,持續進行30,000回轉. (1回轉為360°往返各一次) The shaft of encoder shall be rotated to 30,000cycles at a speed of 600~1000 cycles per hour without electrical load , after which measurement shall be made . (1 cycle： rotate 360°C.C.W. rotate 360° C.W.)	震顫雜音: t1,t3≦5mS 跳躍滑動雜音: t2≦3mS 相位差: △T≧2.5msec 其它初期值亦需滿足。 Chattering: t1,t3≦5ms Bounce: t2≦3ms Phase-difference:△T≧2.5msec Except above items. specifications in clause 2.1~7 and 3.1~6 shall be satisfied.

五. 焊錫耐熱性 Soldering condition

NO.	項 目 item	條 件 conditions	規 格 specifications
5–1	人工手焊 Manual Soldering	溫度350℃以下, 時間3秒鐘以內 . Bit temperature of soldering : 350℃ or less Application time of soldering : 3sec. Max.	不可發生絕緣體變形, 破損以及感觸異常 . There shall be no deformation or cracks in molded part . No excessive abnormality in rotational feeling .
5–2	自動焊錫 Dip soldering	使用基板 : t1.6兩面銅泊積層板 . Printed wiring board : Single-sided copper clad laminate board with thickness of 1.6mm . 助焊劑：發泡式助焊機內置比重0.82以上的助焊劑發泡面高度為基板板厚之2/3。 Flux： ＊Specific gravity: 0.82 or more. ＊Flux shall be applied to the board using a bubble foaming type fluxed. ＊The board shall be soaked in the flux bubble only to the 2/3 of its thickness. 預熱條件:基板表面溫度100°C以下，時間2分鐘以內 Preheating： ＊Surface temperature of board：100°C or less. ＊Preheating time: within 2 min. 焊錫爐條件：溫度260±5°C，時間5±1秒。 Soldering： ＊Solder temperature：260±5°C ＊Immersion time：5±1 sec. 以上工程以一次或兩次為宜。 Apply the above soldering process for 1 or 2 times.	

L. E. D. 共通規格書

L. E. D. COMMON SPECIFICATIONS

一. 回路: **Circuit:**

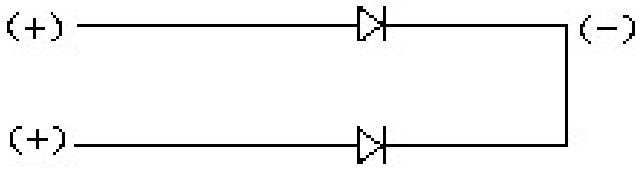

二. LED 特性

LED Characteristic

1. 反轉電壓 Reverse Voltage: 5V

2

發光色 Emitted color		功率消耗 Power dissipation	直流正向電流 DC Forward Current	試驗條件 Test conditions IF=20 mA 直流順電壓 Forward voltage(V)	
				標准值 Typ	以下 MAX
藍色/橙色 Blue /Orange	藍色 Blue	105mW	30mA	3.3	4
	橙色 Orange	75mW	30mA	2.1	2.5
綠色/紅色 Green / Red	綠色 Green	120mW	30mA	3.2	4
	紅色 Red	75mW	30mA	1.95	2.5
藍色/綠色 Blue/Green	藍色 Blue	120mW	30mA	3.3	4
	綠色 Green	120mW	30mA	3.2	4
紅色/綠色 Red /Green	紅色 Red	75mW	30mA	1.95	2.5
	綠色 Green	120mW	30mA	3.2	4
綠色/橙色 Green /Orange	綠色 Green	102.5mW	25mA	3.3	4.1
	橙色 Orange	75mW	30mA	2.1	2.5
藍色/紅色 Blue/ Red	藍色 Blue	120mW	30mA	3.3	4
	紅色 Red	75mW	30mA	1.95	2.5

ROHS COMPLIANCE

					APPD.	CHKD.	DSGD.	DOCUMENT NO. :	
					余倩	余倩	余倩	EC12PLBOVF-D-22KH-24-05/07-6H	
								VERSION :	A
								PAGE :	9 OF 9
SYMB	DATE	APPD	CHKD	DSGD	2012.1.11	2012.1.11	2012.1.11	DRAWING NO.:	EC12-031