# 回轉式位元產生器規格書

## ROTATIONAL ENCODER SPECIFICATION

### 一. 一般事項 General

1-1 適用範圍 Application

此規範適用於一般電子機器之微小電流回路用之11mm rotary encoder.

This specification applies to the 11mm size rotary encoder (incremental) for microscopic current circuit used in electronic equipment.

1-2 標準范圍 Standard atmospheric conditions

若無特別規定, 依下述狀態測定:

Unless otherwise specified the standard range of atmospheric conditions for making measurements and tests is as follows.

溫 度 Ambient temperature : 15℃ to 35℃

相對濕度 Relative humidity : 25% to 85%

氣 壓 Air pressure : 86kpa to 106kpa

但如有疑問時, 依下述基準狀態實施

If there is any doubt the results. measurement shall be made within the follow limits

溫 度 Ambient temperature : 20±2℃

相對濕度 Relative humidity : 60% to 70%

氣 壓 Air pressure : 86kpa to 106kpa

1-3 使用溫度範圍

Operating temperature range : -40℃ to +85℃

1-4 保存溫度範圍

Storage temperature range : -40℃ to +85℃

1-5 構造, 尺寸 Construction and dimensions 依組立圖 Refer to attached drawing

| | | | | | APPD. | CHKD. | DSGD. | DOCUMENT NO. : | |
|---|---|---|---|---|---|---|---|---|---|
| | | | | | | | | EC11MWVBFX-D-15S-20-20C-B10-6H | |
| | | | | | 游騰瑞 | 游騰瑞 | 李紹毅 | VERSION : | A |
| | | | | | | | | PAGE : | 1 OF 8 |
| SYMB | DATE | APPD | CHKD | DSGD | 2019.3.6 | 2019.3.6 | 2019.3.6 | DRAWING NO.: | EC11MW-001 |

# 回轉式位元產生器規格書
## ROTATIONAL ENCODER SPECIFICATION

### 二. 電氣性能 Electrical Characteristics

| NO. | 項 目<br>item | 條 件<br>conditions | 規 格<br>specifications |
|---|---|---|---|
| 2–1 | 輸出信號<br>output signal<br>format | < 圖一 > < fig. 1 > | A . B 二信號的輸出時間相位差, 詳細如<圖一>所示.<br>（圖中虛線表示掣子點位置）<br>2. Phase-different signals<br>( Signal A. & signal B )<br>Details shown in < fig.1 ><br>(The broken line shows detent position of with detent type.) |

| 軸回轉方向<br>Shaft rotational direction | 信 號<br>Signal | 輸出波形 Output<br>定速旋轉 constant speed : 360° |
|---|---|---|
| 順時針方向<br>C. W. | A ( A-C 端子間 )<br>A ( Terminal A-C ) | 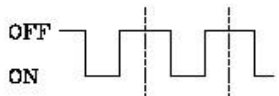 |
| | B ( B-C 端子間 )<br>B ( Terminal B-C ) | 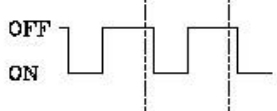 |
| 反時針方向<br>C. C. W. | A ( A-C 端子間 )<br>A ( Terminal A-C ) | 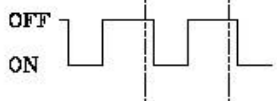 |
| | B ( B-C 端子間 )<br>B ( Terminal B-C ) | 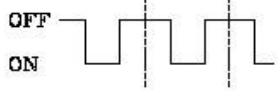 |

| NO. | 項 目<br>item | 條 件<br>conditions | 規 格<br>specifications |
|---|---|---|---|
| 2–2 | 分 解 能<br>Resolution | 旋轉一圈所產生脈波數目.<br>Number of pulses in 360° rotation . | 各相20脈波/360°<br>20 pulses / 360° for each phase<br>(1掣子點 1 pulse)<br>(1click 1 pulse) |

| | | | | | APPD. | CHKD. | DSGD. | DOCUMENT NO. : | |
|---|---|---|---|---|---|---|---|---|---|
| | | | | | 游騰瑞 | 游騰瑞 | 李紹毅 | EC11MWVBFX-D-15S-20-20C-B10-6H | |
| | | | | | | | | VERSION : | A |
| | | | | | | | | PAGE : | 2 OF 8 |
| SYMB | DATE | APPD | CHKD | DSGD | 2019.3.6 | 2019.3.6 | 2019.3.6 | DRAWING NO.: | EC11MW-001 |

# 回轉式位元產生器規格書
## ROTATIONAL ENCODER SPECIFICATION

| NO. | 項 目<br>item | 條 件<br>conditions | 規 格<br>specifications |
|---|---|---|---|
| 2–3 | 切 換 特 性<br>Switching characteristics | 切換測定回路如<圖二>所示, 以直流電壓5V, 軸回轉速度為每秒鐘回轉360°測定 .<br>Measurement shall be made under the condition as follows .<br>(1). Shaft rotational speed : 360° $S^{-1}$<br>(2). Test circuit : < fig. 2 > .<br>< 圖二 > < fig. 2 ><br> 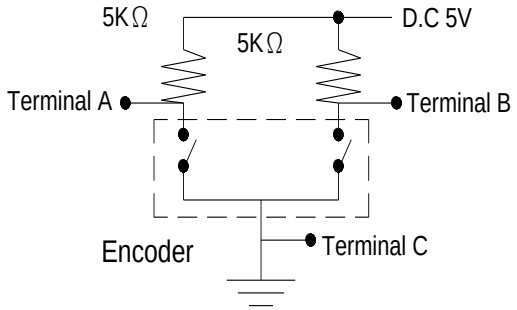 <br> | |
| 2–4 | 滑動 雜 音<br>Sliding noise | (1) 震顫雜音 Chattering<br>如〈圖三〉所示，位元由狀態OFF→ON或ON→OFF變化時,輸 出電壓在1.5V~3.5V的切換時間<br>Details shown in <fig.3> Specified by the signal's passage time from 3.5V to 1.5V or from 1.5V to 3.5V of each switching position ( code OFF→ON or ON→OFF ) .<br>注意：針對震顫雜音(t1，t3)部分，請於訊號抓取上加以遮蔽，進行過濾雜訊。<br>建議追加過濾迴路，如<圖四>所示。<br>Note：To avoid chattering( t1，t3), please consider masking time and adding C/R filters on your circuit for pulse count design, as show in <fig. 4>. | $t_1$ , $t_3$ ≦2ms |

| | | | | | APPD. | CHKD. | DSGD. | DOCUMENT NO. : | |
|---|---|---|---|---|---|---|---|---|---|
| | | | | | | | | EC11MWVBFX-D-15S-20-20C-B10-6H | |
| | | | | | 游騰瑞 | 游騰瑞 | 李紹毅 | VERSION : | A |
| | | | | | | | | PAGE : | 3 OF 8 |
| SYMB | DATE | APPD | CHKD | DSGD | 2019.3.6 | 2019.3.6 | 2019.3.6 | DRAWING NO.: | EC11MW-001 |

# 回轉式位元產生器規格書
## ROTATIONAL ENCODER SPECIFICATION

| NO. | 項　目<br>item | 條　件<br>conditions | 規　格<br>specifications |
|---|---|---|---|
| | | (2) 跳躍雜音 Bounce<br>如<圖三>所示,位元在ON的狀態時,電壓超過1.5V以上的時間視為.當在位元ON狀態時,與震顛雜音($t_1$或$t_3$)時間間隔小于1ms時, 則該跳躍雜音視為震顛雜音的一部份 .<br>當在位元ON狀態時, 兩個跳躍雜音間的間隔小于1ms時, 則視為同一跳躍雜音 .<br>Details shown in <fig.3> .Specified by the time of voltage change exceed 1.5V in code - ON area .<br>When the bounce has code - ON time less than 1ms between chatterings ( $t_1$ or $t_3$ ) , the voltage change shall be regarded as a part of chattering .<br>When the code - ON time between 2 bounces is less than 1ms , they are regarded as 1 linked bounce . | t2 ≦ 2ms |
| | | (3) 滑動雜音Sliding noise<br>位元OFF狀態時的電壓變動 .<br>The voltage change in code-OFF area | 3.5V 以上<br>3.5V MIN. |

<圖三> <fig. 3>

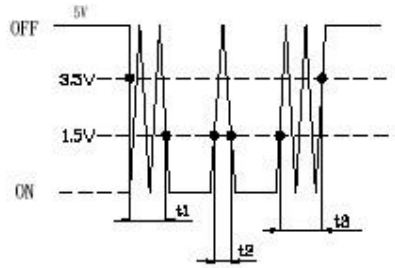


(t1, t3) : Masking time to avoid chattering.

<圖四> <fig. 4>

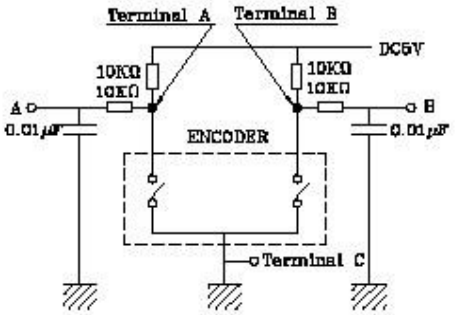


位元OFF狀態 : 輸出電壓3.5V以上的狀態稱之 .
位元ON狀態 : 輸出電壓1.5V以下的狀態稱之 .
Code - OFF area : The area which the voltage is 3.5V or more .
Code - ON area : The area which the voltage is 1.5 V or less .

| | | | | | APPD. | CHKD. | DSGD. | DOCUMENT NO. : | |
|---|---|---|---|---|---|---|---|---|---|
| | | | | | | | | EC11MWVBFX-D-15S-20-20C-B10-6H | |
| | | | | | 游騰瑞 | 游騰瑞 | 李紹毅 | VERSION : | A |
| | | | | | | | | PAGE : | 4 OF 8 |
| SYMB | DATE | APPD | CHKD | DSGD | 2019.3.6 | 2019.3.6 | 2019.3.6 | DRAWING NO.: | EC11MW-001 |

# 回轉式位元產生器規格書
## ROTATIONAL ENCODER SPECIFICATION

| NO. | 項 目<br>item | 條 件<br>conditions | 規 格<br>specifications |
|---|---|---|---|
| 2–5 | 相 位 差<br>Phase-difference | 以定速每秒鐘旋轉360°測定之 .<br>Measurement shall be made under the condition which the shaft is rotated in 360° $S^{-1}$(constant speed).<br>〈圖五〉 <fig.5><br> 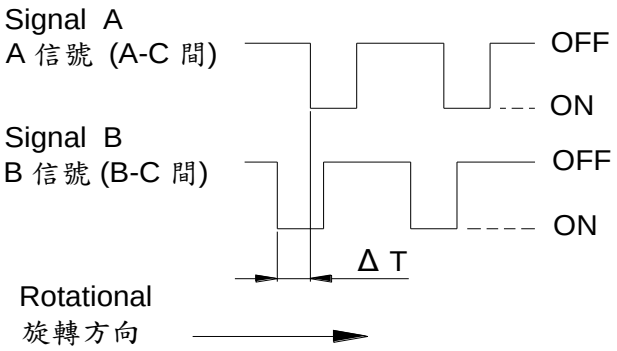 <br> | 如圖五所示，Δ T ≧ 4 msec in < fig. 5 > |
| | | 注意事項：<br>※ 2-4、2-5之規格，為360° / 秒等速下運轉檢測之，與手動旋轉會有所不同。<br>※ 與韌體程式之搭配性，請實際使用測試確認之。<br>Note : ※ The test is conducted with equipment at constant speed: 360°/S according to Spec. Item 2-4 & 2-5, and the test result could be different from the result by manual test.<br>※ In order to prove the interoperability between the firmware and the encoder, please test the part in real condition | |
| 2–6 | 絕緣阻抗<br>Insulation resistance | 外加電壓250VD.C于軸受與任一端子間.<br>Measurement shall be made under the condition which a voltage of 250VD.C is applied between individual terminals and bushing . | 軸受與端子間100MΩ 以上.<br>Between individual terminals and bushing .<br>100MΩ MIN . |
| 2–7 | 耐電壓強度<br>Dielectric strength | 於軸受與任一端子間外加電壓300VA.C.<br>1分鐘或360VA.C. 2 秒鐘<br>A voltage of 300V A.C. shall be applied for 1 min or a voltage of 360V A.C. shall be applied for 2 sec between individual terminals and bushing<br>( Leak current : 1mA ) | 無損傷, 短路及絕緣破壞現象 .<br>Without damage to parts arcing or breakdown . |
| 2-8 | 定格容量<br>Rating | | D.C. 5V 10 mA |

| | | | | | APPD. | CHKD. | DSGD. | DOCUMENT NO. : | |
|---|---|---|---|---|---|---|---|---|---|
| | | | | | | | | EC11MWVBFX-D-15S-20-20C-B10-6H | |
| | | | | | 游騰瑞 | 游騰瑞 | 李紹毅 | VERSION : | A |
| | | | | | | | | PAGE : | 5 OF 8 |
| SYMB | DATE | APPD | CHKD | DSGD | 2019.3.6 | 2019.3.6 | 2019.3.6 | DRAWING NO.: | EC11MW-001 |

# 回轉式位元產生器規格書
## ROTATIONAL ENCODER SPECIFICATION

### 三. 機械性能 Mechanical characteristics

| NO. | 項 目<br>item | 條 件<br>conditions | 規 格<br>specifications |
|---|---|---|---|
| 3–1 | 全回轉角度<br>Total rotational angle | | 360° 回轉 |
| 3–2 | 掣子點轉距<br>Detent torque | | 10~80gf.cm |
| 3–3 | 掣子點數目及位置<br>Number and position of detents | | 20點掣子點 20 detents<br>(每點角度18°±3°)<br>(Step angle：18°±3°) |
| 3–4 | 端 子 強 度<br>Terminal strength | 外加靜重500gf之力于端子前端之任意方向上1分鐘.<br>A static load of 500gf be applied to the tip of terminals for 1 minute in any direction . | 端子無損壞或顯著松動, 但是端子可允許彎曲 .<br>Without damage or excessive looseness of terminals. Terminal bend is permitted. |
| 3–5 | 軸擠壓引張強度<br>Push - pull strength of shaft | 在軸之方向加壓力或張力之靜負荷10Kgf, 10秒（實裝狀態）.<br>Push and pull static load of 10Kgf, shall be applied to the shaft in the axial direction for 10sec .( After installing ) | 不可有電氣或機械上的異常<br>Without damage or excessive play in shaft .No excessive abnormality in rotational feeling. |
| 3–6 | 軸 松 動<br>Shaft wobble | 軸端5mm處,加上500gf-cm之力矩 .<br>A momentary load of 500gf.cm shall be applied at the point 5mm from the tip of the shaft in a direction perpendicular to the axis of shaft . | 軸受長 Bushing Length (mm) / 軸鬆動 wobble 以下 (mmp-p less)<br>3.5 — 1.4xL/30<br>5 — 1.1xL/30<br>7 — 0.7xL/30<br>L:軸受固定面至施力點之距離.<br>L: Measurment point from mounting surface of bushing. |

| | | | | | APPD. | CHKD. | DSGD. | DOCUMENT NO. : | |
|---|---|---|---|---|---|---|---|---|---|
| | | | | | | | | EC11MWVBFX-D-15S-20-20C-B10-6H | |
| | | | | | 游騰瑞 | 游騰瑞 | 李紹毅 | VERSION : | A |
| | | | | | | | | PAGE : | 6 OF 8 |
| SYMB | DATE | APPD | CHKD | DSGD | 2019.3.6 | 2019.3.6 | 2019.3.6 | DRAWING NO.: | EC11MW-001 |

| NO. | 項 目<br>item | 條 件<br>conditions | 規 格<br>specifications |
|---|---|---|---|
| 3–7 | 軸推力方向游離間隙<br>shaft play in axizl direction | | 0.4mmp-p 以下<br>0.4mmp-p MAX. |
| 3–8 | 軸回轉方向間隙<br>Rotation play at the click position | 使用角度板測定<br>Mesurement with jig for rotational angle. | 5°以內<br>5° MAX. |
| 3-9 | 安裝注意事項<br>Notice for mounting | <圖五>軸受固定示意圖。<br>Tighten the nut according to <fig.5><br><圖五><br><fig.5><br> 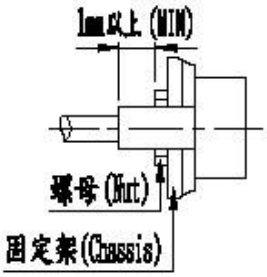 <br> | 10kgf.cm以下。<br>Tightening torque to be no greater than 10kgf.cm. |

**四. 耐久性能 Endurance characteristics**

| NO. | 項 目<br>item | 條 件<br>conditions | 規 格<br>specifications |
|---|---|---|---|
| 4-1 | 回 轉 壽 命<br>Rotational life | 無任何電氣負荷下,軸以每小時500回轉的速度下,持續進行1,000,000回轉.(1回轉為360°往返各一次)<br>The shaft of encoder shall be rotated to 1,000,000 cycles at a speed of 500 cycles per hour without electrical load, after which measurement shall be made .( 1 cycles : rotate 360° C.C.W. rotate 360° C.W .) | 掣子點轉矩：<br>滿足初期規格值之+10%/-50%<br>滑動雜音：t1,t2，t3≦3ms<br>其它初期值亦需滿足。<br>Detent torque：<br>Relative to the previously specified value +10%/-50%.<br>Sliding noise：<br>t1,t2,t3 ≦3ms |

# 回轉式位元產生器規格書

## ROTATIONAL ENCODER SPECIFICATION

### 五. 焊錫耐熱性 Soldering condition

| NO. | 項 目<br>item | 條 件<br>conditions | 規 格<br>specifications |
|---|---|---|---|
| 5–1 | 人 工 手 焊<br>Manual Soldering | 溫度350℃ 以下，時間3 秒鐘以內。<br>Bit temperature of soldering iron：350℃ or less<br>Application time of soldering iron：within 3s. | 不可發生絕緣體變形、破損以及感觸異常。<br>There shall be no deformation or cracks in molded part. No excessive abnormality in rotational feeling. |
| 5–2 | 自 動 焊 錫<br>Dip soldering | 使用基板：t1.6 兩面銅泊積層板。<br>Printed wiring board：Both-sided copper clad laminate board with thickness of 1.6mm.<br>助焊劑：發泡式助焊機內置比重0.82 以上的助焊劑，發泡面高度為基板板厚之2/3。<br>Flux：＊Specific gravity: 0.82 or more.<br>＊Flux shall be applied to the board using a bubble foaming type fluxed.<br>＊The board shall be soaked in the flux bubble only to the 2/3 of its thickness.<br>預熱條件：基板表面溫度100℃ 以下，時間2 分鐘以內。<br>Preheating：<br>＊Surface temperature of board：100℃ or less.<br>＊Preheating time: within 2 min.<br>焊錫爐條件：溫度260±5℃，時間5±1 秒。<br>Soldering：<br>＊Solder temperature：260±5℃<br>＊Immersion time：5±1 sec.<br>以上工程以一次或兩次為宜。<br>Apply the above soldering process for 1 or 2 times. | |

### 六、防水性能 Water Proof

| NO. | 項 目<br>item | 條 件<br>conditions | 規 格<br>specifications |
|---|---|---|---|
| 6–1 | 防水性能<br>Water Proof | (1) 水溫：50~30℃<br>water temperature: 50~30℃<br>(2) 水深：10cm<br>water depth: 10cm<br>(3) 時間：1 小時<br>time: 1 hour<br>試驗完成後須將外部保持乾燥，才能進行測量。<br>After the test is completed, the external must be keep dry before measure. | 不可有電氣或機械上的異常。<br>Without damage or Excessive play in shaft.<br>No excessive abnormality in rotational feeling. |

| | | | | | APPD. | CHKD. | DSGD. | DOCUMENT NO. : | |
|---|---|---|---|---|---|---|---|---|---|
| | | | | | | | | EC11MWVBFX-D-15S-20-20C-B10-6H | |
| | | | | | 游騰瑞 | 游騰瑞 | 李紹毅 | VERSION : | A |
| | | | | | | | | PAGE : | 8 OF 8 |
| SYMB | DATE | APPD | CHKD | DSGD | 2019.3.6 | 2019.3.6 | 2019.3.6 | DRAWING NO.: | EC11MW-001 |