回轉式位元產生器規格書

ROTATIONAL ENCODER SPECIFICATION

一. 一般事項 General

1-1 適用範圍 Application

此規範適用於一般電子機器之微小電流回路用之11mm rotary encoder.

This specification applies to the 11mm size rotary encoder (incremental) for microscopic current circuit used in electronic equipment.

1-2 標準范圍 Standard atmospheric conditions

若無特別規定, 依下述狀態測定:

Unless otherwise specified the standard range of atmospheric conditions for making measurements and tests is as follows.

溫 度 Ambient temperature : 15℃ to 35℃

相對濕度 Relative humidity : 25% to 85%

氣 壓 Air pressure : 86kpa to 106kpa

但如有疑問時, 依下述基準狀態實施

If there is any doubt the results. measurement shall be made within the follow limits

溫 度 Ambient temperature : 20±2℃

相對濕度 Relative humidity : 60% to 70%

氣 壓 Air pressure : 86kpa to 106kpa

1-3 使用溫度範圍

Operating temperature range : -40℃ to +85℃

1-4 保存溫度範圍

Storage temperature range : -40℃ to +85℃

1-5 構造, 尺寸 Construction and dimensions 依組立圖 Refer to attached drawing

					APPD.	CHKD.	DSGD.	DOCUMENT NO. :	
								EC11MWSEVBFX-D-20F-20-20C-B11-6H	
					游騰瑞	游騰瑞	李紹毅	VERSION :	A
								PAGE :	1 OF 10
SYMB	DATE	APPD	CHKD	DSGD	2019.3.6	2019.3.6	2019.3.6	DRAWING NO.:	EC11MWSE-001

回轉式位元產生器規格書
ROTATIONAL ENCODER SPECIFICATION

二. 電氣性能 Electrical Characteristics

NO.	項 目 item	條 件 conditions	規 格 specifications
2–1	輸出信號 output signal format	< 圖一 > < fig. 1 >	A . B 二信號的輸出時間相位差, 詳細如<圖一>所示. （圖中虛線表示掣子點位置） 2. Phase-different signals (Signal A. & signal B) Details shown in < fig.1 > (The broken line shows detent position of with detent type.)

軸回轉方向 Shaft rotational direction	信 號 Signal	輸出波形 Output 定速旋轉 constant speed : 360°
順時針方向 C. W.	A (A-C 端子間) A (Terminal A-C)	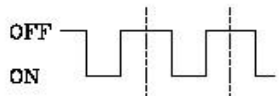
	B (B-C 端子間) B (Terminal B-C)	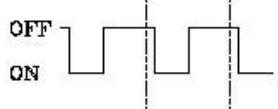
反時針方向 C. C. W.	A (A-C 端子間) A (Terminal A-C)	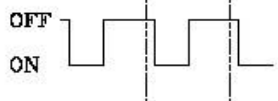
	B (B-C 端子間) B (Terminal B-C)	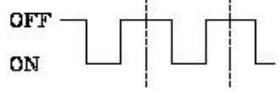

2–2	分 解 能 Resolution	旋轉一圈所產生脈波數目. Number of pulses in 360° rotation .	各相20脈波/360° 20 pulses / 360° for each phase (1掣子點 1 pulse) (1click 1 pulse)

					APPD.	CHKD.	DSGD.	DOCUMENT NO. :	
								EC11MWSEVBFX-D-20F-20-20C-B11-6H	
					游騰瑞	游騰瑞	李紹毅	VERSION :	A
								PAGE :	2 OF 10
SYMB	DATE	APPD	CHKD	DSGD	2019.3.6	2019.3.6	2019.3.6	DRAWING NO.:	EC11MWSE-001

回轉式位元產生器規格書
ROTATIONAL ENCODER SPECIFICATION

NO.	項 目 item	條 件 conditions	規 格 specifications
2–3	切 換 特 性 Switching characteristics	切換測定回路如<圖二>所示, 以直流電壓5V, 軸回轉速度為每秒鐘回轉360°測定 . Measurement shall be made under the condition as follows . (1). Shaft rotational speed : 360° S^{-1} (2). Test circuit : < fig. 2 > . < 圖二 > < fig. 2 > 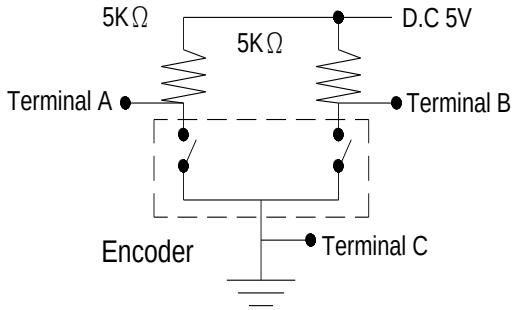 	
2–4	滑動 雜 音 Sliding noise	(1) 震顫雜音 Chattering 如〈圖三〉所示，位元由狀態OFF→ON或ON→OFF變化時,輸 出電壓在1.5V~3.5V的切換時間 Details shown in <fig.3> Specified by the signal's passage time from 3.5V to 1.5V or from 1.5V to 3.5V of each switching position (code OFF→ON or ON→OFF) . 注意：針對震顫雜音(t1，t3)部分，請於訊號抓取上加以遮蔽，進行過濾雜訊。 建議追加過濾迴路，如<圖四>所示。 Note：To avoid chattering(t1，t3), please consider masking time and adding C/R filters on your circuit for pulse count design, as show in <fig. 4>.	t_1 , t_3 ≦2ms

					APPD.	CHKD.	DSGD.	DOCUMENT NO. :	
								EC11MWSEVBFX-D-20F-20-20C-B11-6H	
					游騰瑞	游騰瑞	李紹毅	VERSION :	A
								PAGE :	3 OF 10
SYMB	DATE	APPD	CHKD	DSGD	2019.3.6	2019.3.6	2019.3.6	DRAWING NO.:	EC11MWSE-001

回轉式位元產生器規格書
ROTATIONAL ENCODER SPECIFICATION

NO.	項　目 item	條　件 conditions	規　格 specifications
		(2) 跳躍雜音 Bounce 如<圖三>所示,位元在ON的狀態時,電壓超過1.5V以上的時間視為.當在位元ON狀態時,與震顛雜音(t_1或t_3)時間間隔小于1ms時, 則該跳躍雜音視為震顛雜音的一部份 . 當在位元ON狀態時, 兩個跳躍雜音間的間隔小于1ms時, 則視為同一跳躍雜音 . Details shown in <fig.3> .Specified by the time of voltage change exceed 1.5V in code - ON area . When the bounce has code - ON time less than 1ms between chatterings (t_1 or t_3) , the voltage change shall be regarded as a part of chattering . When the code - ON time between 2 bounces is less than 1ms , they are regarded as 1 linked bounce .	t2 ≦ 2ms
		(3) 滑動雜音Sliding noise 位元OFF狀態時的電壓變動 . The voltage change in code-OFF area	3.5V 以上 3.5V MIN.

<圖三> <fig. 3>

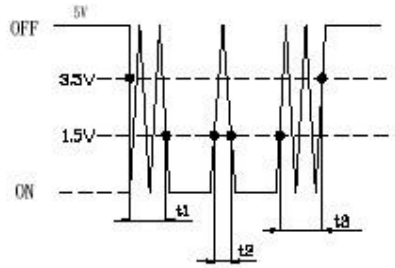

(t1, t3) : Masking time to avoid chattering.

<圖四> <fig. 4>

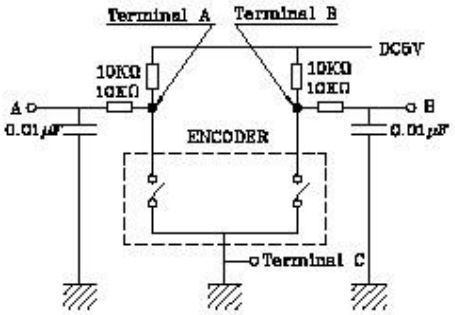

位元OFF狀態 : 輸出電壓3.5V以上的狀態稱之 .
位元ON狀態 : 輸出電壓1.5V以下的狀態稱之 .
Code - OFF area : The area which the voltage is 3.5V or more .
Code - ON area : The area which the voltage is 1.5 V or less .

					APPD.	CHKD.	DSGD.	DOCUMENT NO. :	
								EC11MWSEVBFX-D-20F-20-20C-B11-6H	
					游騰瑞	游騰瑞	李紹毅	VERSION :	A
								PAGE :	4 OF 10
SYMB	DATE	APPD	CHKD	DSGD	2019.3.6	2019.3.6	2019.3.6	DRAWING NO.:	EC11MWSE-001

回轉式位元產生器規格書
ROTATIONAL ENCODER SPECIFICATION

NO.	項 目 item	條 件 conditions	規 格 specifications
2–5	相 位 差 Phase-difference	以定速每秒鐘旋轉360°測定之 . Measurement shall be made under the condition which the shaft is rotated in 360° S^{-1}(constant speed). 〈圖五〉 <fig.5> 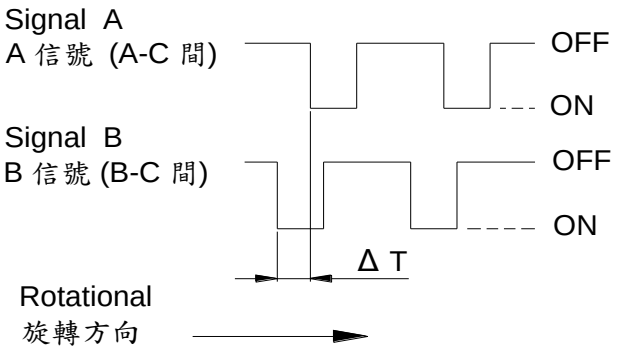 	如圖五所示，Δ T ≧ 4 msec in < fig. 5 >
		注意事項： ※ 2-4、2-5之規格，為360° / 秒等速下運轉檢測之，與手動旋轉會有所不同。 ※ 與韌體程式之搭配性，請實際使用測試確認之。 Note : ※ The test is conducted with equipment at constant speed: 360°/S according to Spec. Item 2-4 & 2-5, and the test result could be different from the result by manual test. ※ In order to prove the interoperability between the firmware and the encoder, please test the part in real condition	
2–6	絕緣阻抗 Insulation resistance	外加電壓250VD.C于軸受與任一端子間. Measurement shall be made under the condition which a voltage of 250VD.C is applied between individual terminals and bushing .	軸受與端子間100MΩ 以上. Between individual terminals and bushing . 100MΩ MIN .
2–7	耐電壓強度 Dielectric strength	於軸受與任一端子間外加電壓300VA.C. 1分鐘或360VA.C. 2 秒鐘 A voltage of 300V A.C. shall be applied for 1 min or a voltage of 360V A.C. shall be applied for 2 sec between individual terminals and bushing (Leak current : 1mA)	無損傷, 短路及絕緣破壞現象 . Without damage to parts arcing or breakdown .
2-8	定格容量 Rating		D.C. 5V 10 mA

					APPD.	CHKD.	DSGD.	DOCUMENT NO. :	
								EC11MWSEVBFX-D-20F-20-20C-B11-6H	
					游騰瑞	游騰瑞	李紹毅	VERSION :	A
								PAGE :	5 OF 10
SYMB	DATE	APPD	CHKD	DSGD	2019.3.6	2019.3.6	2019.3.6	DRAWING NO.:	EC11MWSE-001

回轉式位元產生器規格書
ROTATIONAL ENCODER SPECIFICATION

三. 機械性能 Mechanical characteristics

NO.	項 目 item	條 件 conditions	規 格 specifications
3–1	全回轉角度 Total rotational angle		360° 回轉
3–2	掣子點轉距 Detent torque		10~80gf.cm
3–3	掣子點數目及位置 Number and position of detents		20點掣子點 20 detents (每點角度18°±3°) (Step angle：18°±3°)
3–4	端 子 強 度 Terminal strength	外加靜重500gf之力于端子前端之任意方向上1分鐘. A static load of 500gf be applied to the tip of terminals for 1 minute in any direction .	端子無損壞或顯著松動, 但是端子可允許彎曲 . Without damage or excessive looseness of terminals. Terminal bend is permitted.
3–5	軸擠壓引張強度 Push - pull strength of shaft	在軸之方向加壓力或張力之靜負荷10Kgf, 10秒（實裝狀態）. Push and pull static load of 10Kgf, shall be applied to the shaft in the axial direction for 10sec .(After installing)	不可有電氣或機械上的異常 Without damage or excessive play in shaft .No excessive abnormality in rotational feeling.
3–6	軸 松 動 Shaft wobble	軸端5mm處,加上500gf-cm之力矩 . A momentary load of 500gf.cm shall be applied at the point 5mm from the tip of the shaft in a direction perpendicular to the axis of shaft .	軸受長 Bushing Length (mm) / 軸鬆動 wobble 以下 (mmp-p less) 3.5 — 1.4xL/30 5 — 1.1xL/30 7 — 0.7xL/30 L:軸受固定面至施力點之距離. L: Measurment point from mounting surface of bushing.

					APPD.	CHKD.	DSGD.	DOCUMENT NO. :	
								EC11MWSEVBFX-D-20F-20-20C-B11-6H	
					游騰瑞	游騰瑞	李紹毅	VERSION :	A
								PAGE :	6 OF 10
SYMB	DATE	APPD	CHKD	DSGD	2019.3.6	2019.3.6	2019.3.6	DRAWING NO.:	EC11MWSE-001

回轉式位元產生器規格書
ROTATIONAL ENCODER SPECIFICATION

NO.	項 目 item	條 件 conditions	規 格 specifications
3–7	軸推力方向游離間隙 shaft play in axizl direction		0.4mmp-p 以下 0.4mmp-p MAX.
3–8	軸回轉方向間隙 Rotation play at the click position	使用角度板測定 Mesurement with jig for rotational angle.	5°以內 5° MAX.
3-9	安裝注意事項 Notice for mounting	<圖五>軸受固定示意圖。 Tighten the nut according to <fig.5> <圖五> <fig. 5> 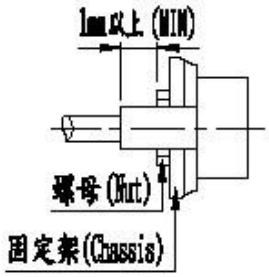 	10kgf.cm以下。 Tightening torque to be no greater than 10kgf.cm.

四. 耐久性能 Endurance characteristics

NO.	項 目 item	條 件 conditions	規 格 specifications
4-1	回 轉 壽 命 Rotational life	無任何電氣負荷下,軸以每小時500回轉的速度下,持續進行1,000,000回轉.(1回轉為360°往返各一次) The shaft of encoder shall be rotated to 1,000,000 cycles at a speed of 500 cycles per hour without electrical load , after which measurement shall be made .(1 cycles : rotate 360° C.C.W. rotate 360° C.W .)	掣子點轉矩： 滿足初期規格值之+10%/-50% 滑動雜音：t1,t2,t3≦3ms 其它初期值亦需滿足。 Detent torque： Relative to the previously specified value +10%/-50%. Sliding noise：t1,t2,t3 ≦3ms

					APPD.	CHKD.	DSGD.	DOCUMENT NO. :	
					游騰瑞	游騰瑞	李紹毅	EC11MWSEVBFX-D-20F-20-20C-B11-6H	
								VERSION :	A
								PAGE :	7 OF 10
SYMB	DATE	APPD	CHKD	DSGD	2019.3.6	2019.3.6	2019.3.6	DRAWING NO.:	EC11MWSE-001

回轉式位元產生器規格書

ROTATIONAL ENCODER SPECIFICATION

五. 焊錫耐熱性 Soldering condition

NO.	項 目 item	條 件 conditions	規 格 specifications
5–1	人 工 手 焊 Manual Soldering	溫度350℃ 以下，時間3 秒鐘以內。 Bit temperature of soldering iron：350℃ or less Application time of soldering iron：within 3s.	不可發生絕緣體變形、破損以及感觸異常。 There shall be no deformation or cracks in molded part. No excessive abnormality in rotational feeling.
5–2	自 動 焊 錫 Dip soldering	使用基板：t1.6 兩面銅泊積層板。 Printed wiring board：Both-sided copper clad laminate board with thickness of 1.6mm. 助焊劑：發泡式助焊機內置比重0.82 以上的助焊劑，發泡面高度為基板板厚之2/3。 Flux：＊Specific gravity: 0.82 or more. ＊Flux shall be applied to the board using a bubble foaming type fluxed. ＊The board shall be soaked in the flux bubble only to the 2/3 of its thickness. 預熱條件：基板表面溫度100℃ 以下，時間2 分鐘以內。 Preheating： ＊Surface temperature of board：100℃ or less. ＊Preheating time: within 2 min. 焊錫爐條件：溫度260±5℃，時間5±1 秒。 Soldering： ＊Solder temperature：260±5℃ ＊Immersion time：5±1 sec. 以上工程以一次或兩次為宜。 Apply the above soldering process for 1 or 2 times.	

六、防水性能 Water Proof

NO.	項 目 item	條 件 conditions	規 格 specifications
6–1	防水性能 Water Proof	(1) 水溫：50~30℃ water temperature: 50~30℃ (2) 水深：10cm water depth: 10cm (3) 時間：1 小時 time: 1 hour 試驗完成後須將外部保持乾燥，才能進行測量。 After the test is completed, the external must be keep dry before measure.	不可有電氣或機械上的異常。 Without damage or Excessive play in shaft. No excessive abnormality in rotational feeling.

觸壓式瞬間開關規格書

PUSH MOMENTARY SWITCH SPECIFICATION

七、開關電氣性能 Switch Electrical characteristics

NO.	項目 item	條件 conditions	規格 specifications
7–1	接觸阻抗 Contact resistance	以D.C.定電流電壓降下法測定之。 Measured by decides the electric current D.C. voltage drop method.	100 mΩ 以下 100 mΩ MAX.
7–2	震顫雜音 Chattering	一周期動作 (OFF - ON - OFF) 為1秒鐘 . Switch is operated at the rate of 1 cycle 1 sec . The 1 cycle shall be OFF - ON - OFF .	10msec 以下 Less than 10 msec .
7–3	絕緣阻抗 Insulation resistance	外加D.C. 250V于端子與軸受間. Measurement shall be made under the condition which a voltage of 250V D.C. is applied between individual terminals and bushing .	端子與軸受間100MΩ以上 Between individual terminals and bushing 100MΩ MIN .
7–4	耐電壓 Dielectric strength	端子與軸受間外加A.C. 300V 1分鐘或外加A.C. 360V 2秒鐘測定, (Leak 電流 : 1mA) A voltage of 300V A.C. shall be applied for 1 min or a voltage of 360V A.C. shall be applied for 2 sec between individual terminals and bushing . (Leak current : 1mA)	無損傷, 變形或絕緣破壞現象. Without damage to parts arcing or breakdown .
7–5	定格容量(低抗負荷Switch rating (Resistor load)		D.C. 5V 10 mA
	備注 Note	軸與開關端子間絕緣 . Shaft is insulated from switch terminal .	

八 . 機械性能 (Mechanical characteristicals)

NO.	項目 item	條件 conditions	規格 specifications
8–1	開關回路,接點數 Contact arrangement		單極單投 (PUSH ON) S.P.S.T (PUSH ON)

					APPD.	CHKD.	DSGD.	DOCUMENT NO. :	
					游騰瑞	游騰瑞	李紹毅	EC11MWSEVBFX-D-20F-20-20C-B11-6H	
								VERSION :	A
								PAGE :	9 OF 10
SYMB	DATE	APPD	CHKD	DSGD	2019.3.6	2019.3.6	2019.3.6	DRAWING NO.:	EC11MWSE-001

觸壓式瞬間開關規格書

PUSH MOMENTARY SWITCH SPECIFICATION

NO.	項　目 item	條　件 conditions	規　格 specifications
8–2	開關移動量 Switching stroke		1.5±0.5 mm
8–3	開關作動力 Switch strength		400±200gf

九 . 開關耐久性能 （Switch Endurance characteristics ）

NO.	項　目 item	條　件 conditions	規　格 specifications
9–1	操作壽命 Operating life	無負荷狀態下動作20,000回。 The shaft of switch shall be 20,000 times without electronically load, after which measurements shall be made.	接觸阻抗: 200mΩ以下 開關作動力：滿足初期規格值之+10%/-30%。 其它項目均需滿足初期規格值 Switch contact resistance：200mΩ MAX. Switch strength： Relative to the previously specified value +10%/-30%. Except above items Specification in clause 7.1~4 and 8.1~3 shall be satisfied.

ROHS COMPLIANCE

					APPD.	CHKD.	DSGD.	DOCUMENT NO. :	
								EC11MWSEVBFX-D-20F-20-20C-B11-6H	
					游騰瑞	游騰瑞	李紹毅	VERSION :	A
								PAGE :	10 OF 10
SYMB	DATE	APPD	CHKD	DSGD	2019.3.6	2019.3.6	2019.3.6	DRAWING NO.:	EC11MWSE-001