11mm Size Series Encoders

Low-Profle Type

TOP-UP

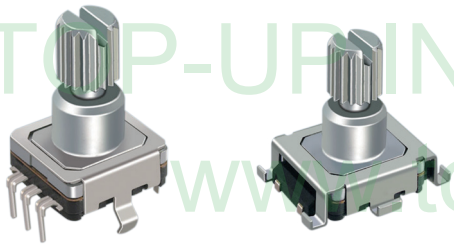

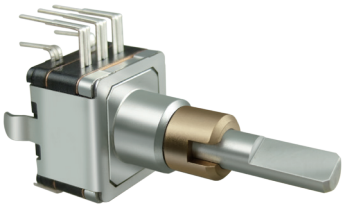

▲FEATURE
- Encoder of Surface Mount Device type.
- Dual-Shaft type.
- With push-on switch.

▲APPLICATIONS
- Most suitable for all controls of compact and low profile electronic equipment.
- Hi-Fi, CD, Mini Disc and MP3 players, volume, tone and title search controls.
- TV/monitor OSD setting.

Common Specifications

Pulse	Number of detent	Phase difference (msec)	Chattering (msec)	Sliding noise (msec)	Insulation resistance	Dielectric strength	Detent torque (gf•cm)	Rotational life(cycle)
15	0	4	2	2	250V DC 100MΩ MIN	300V AC 1 min	50gf.cm Max	15,000
	30						100±70	

Switch Specifications

Rating	Contact resistance	Insulation resistance	Dielectric strength	Contact arrangement	Travel of switch(mm)	Operating force(gf)	Operating life(cycle)
DC 5V 10 mA	100mΩ	250V DC 100MΩ MIN	300V AC 1 min	PUSH ON	0.5	350±100	20,000
					1.5	400±200	

TOP-UP INDUSTRY CORP.
www.top-up.com.tw

EC11LM Series Code Explanation

EC11LM	S	D	V	5	NB	F -	D -	20	K -	10 -	30C	- □□□
1	2	3	4	5	6	7	8	9	10	11	12	13

TOP-UP INDUSTRY CORP.
www.top-up.com.tw

1. Product Lines of EC11LM(11mm Slim Type Encoder)
2. Switch : S- With Switch; Blank- Without Switch
3. Swtich Travel : D - 0.5mm ; E - 1.5mm

Code	D	E
Travel	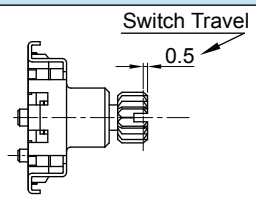	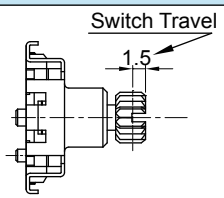

4. Vertical Type : Code - V
5. Bushing Length
6. Type of Bushing

(Without Screw)	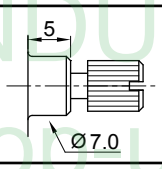
NB (Standard)	

7. Type of Frame

F	F1
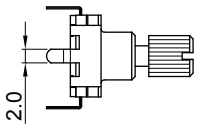	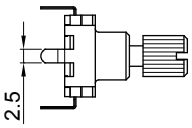

8. Type of Terminal

P.C.B Type		SMD Type
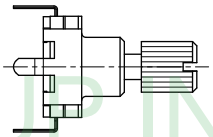	Vertical	SMT
	D 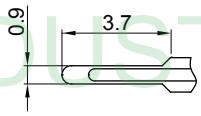	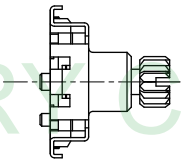

9. Shaft Length

EC11LM Series Code Explanation

EC11LM	S	D	V	5	NB	F -	D -	20	K -	10 -	30C -	□□□
1	2	3	4	5	6	7	8	9	10	11	12	13

10. Type of Shaft

	Without Switch			0.5mm Switch Stroke			1.5mm Switch Stroke		
K (Zinc Diecast)	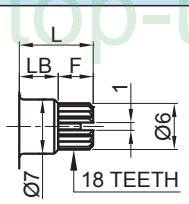			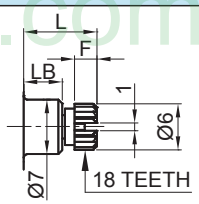			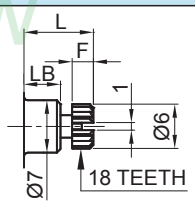		
	L	LB	F	L	LB	F	L	LB	F
	9.5	5	4.5	9.5	5	2.9	9.5	5	2.9
				13.5	5	6.9	13.5	5	6.9
K1 (Aluminum)	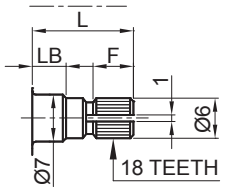			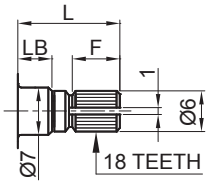			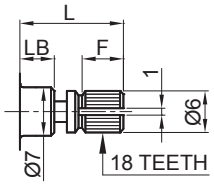		
	L	LB	F	L	LB	F	L	LB	F
	15	5	8	15	5	7	15	5	6
	20	7	10	20	7	9	20	7	8
F Type	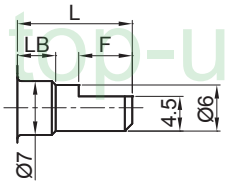			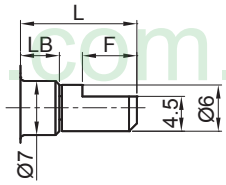			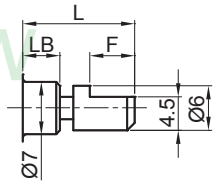		
	L	LB	F	L	LB	F	L	LB	F
	15	5	7	15	5	7	15	5	7
	20	7	12	20	7	10	20	7	10
HF Type (Dual-shaft)	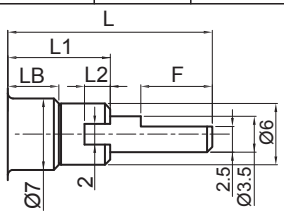			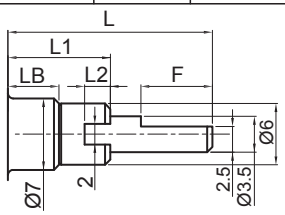			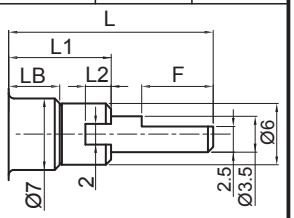		
	L	LB	F	L1	L2	L	LB	F	L1	L2	L	LB	F	L1	L2
	20	5	7	10	2.5 or 4	20	5	7	10	2.5 or 4	20	5	7	10	2.5 or 4
	20	7	7	12		20	7	12	12		20	7	12	12	

11. Output Pulse : 15 - 15 Pulse
12. Number of Detent: Blank- None, 30C -30 Detent
13. Series No.

TOP-UP INDUSTRY CORP.
www.top-up.com.tw

11mm Size Series Encoders

Low-Profle Type

TOP-UP

EC11LM5NBF-SMT

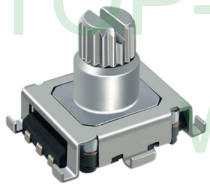

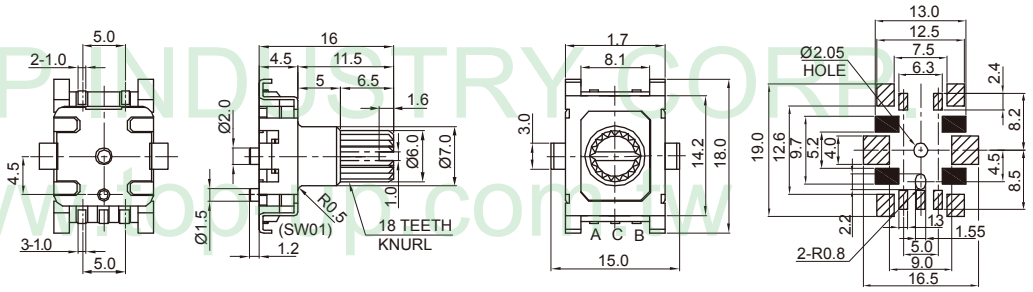

EC11LMSD5NBF-SMT

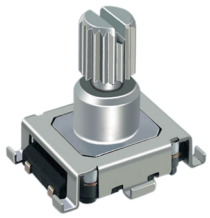

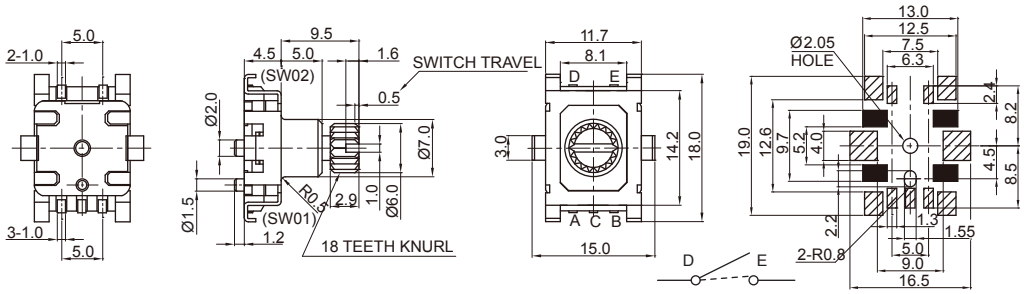

EC11LMSE5NBF-SMT

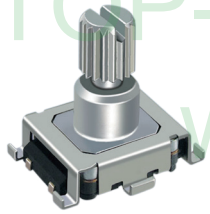

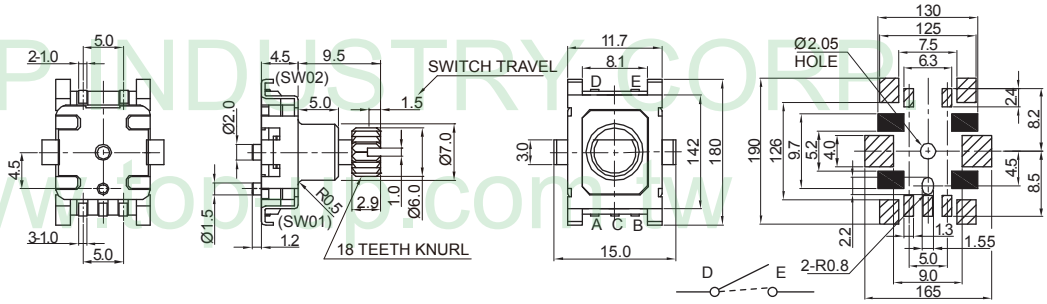

EC11LMV5NBF-D

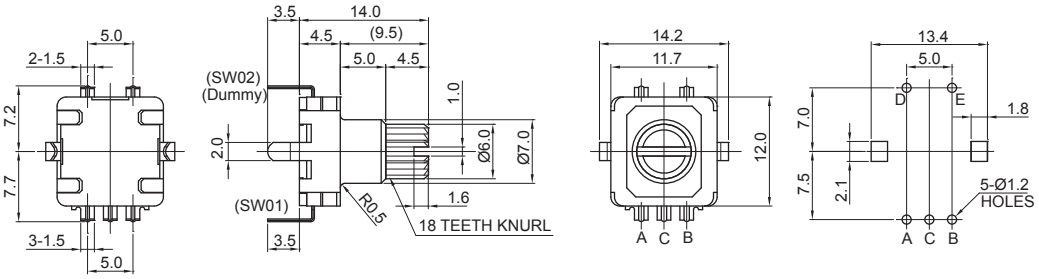

EC11LMSDV5NBF-D

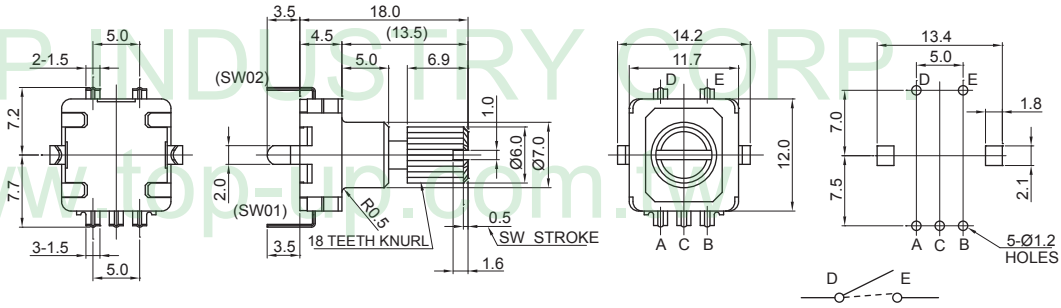

TOP-UP INDUSTRY CORP.
www.top-up.com.tw

11mm Size Series Encoders

Low-Profle Type

TOP-UP

EC11LMSDV5NBF1-D

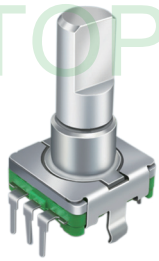

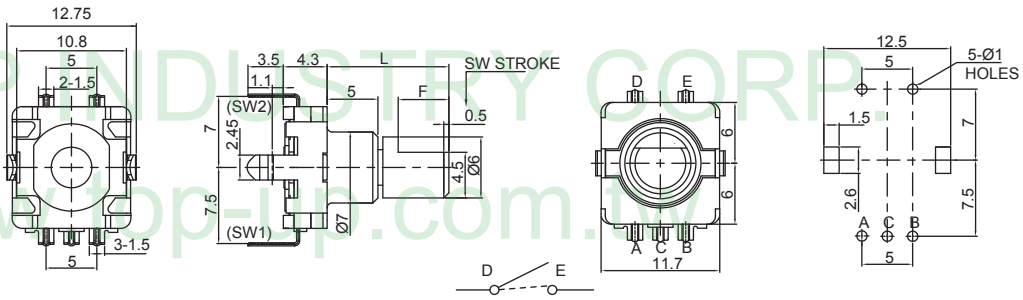

EC11LMSEV5NBF-D

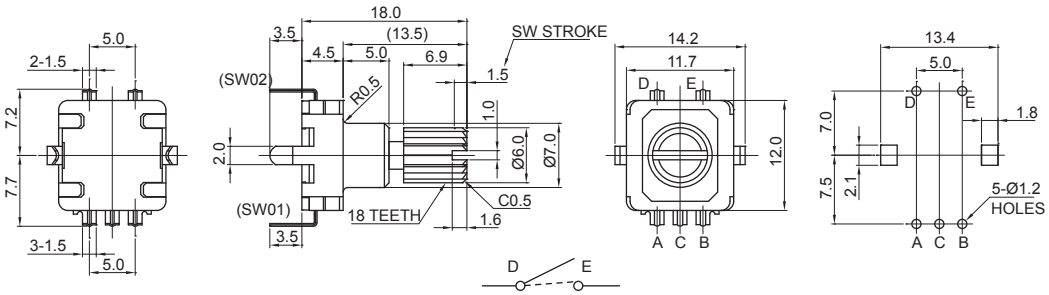

EC11LMV5NBF1-D-□HF

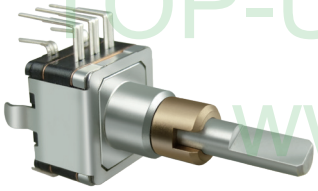

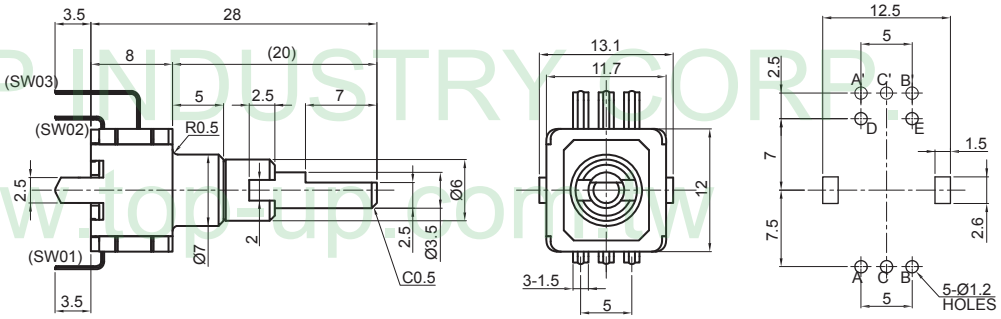

EC11LMSDV5NBF1-D-□HF

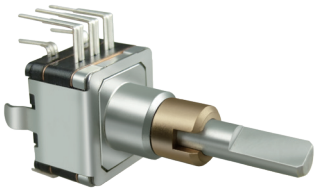

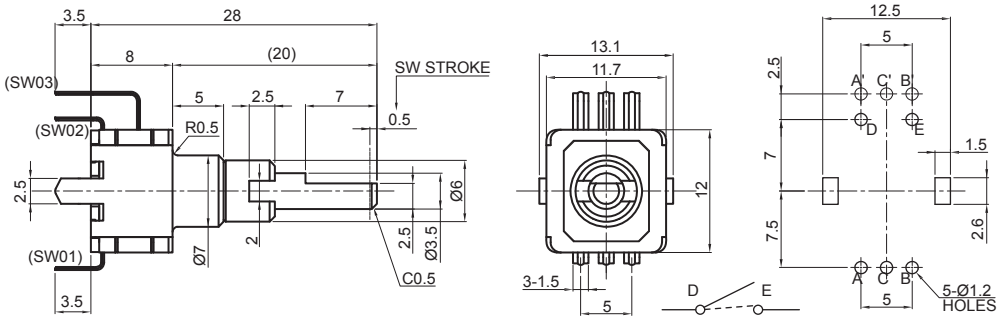

EC11LMSEV5NBF1-D-□HF

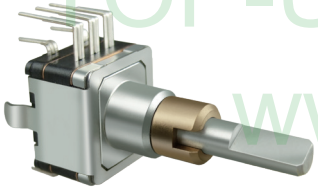

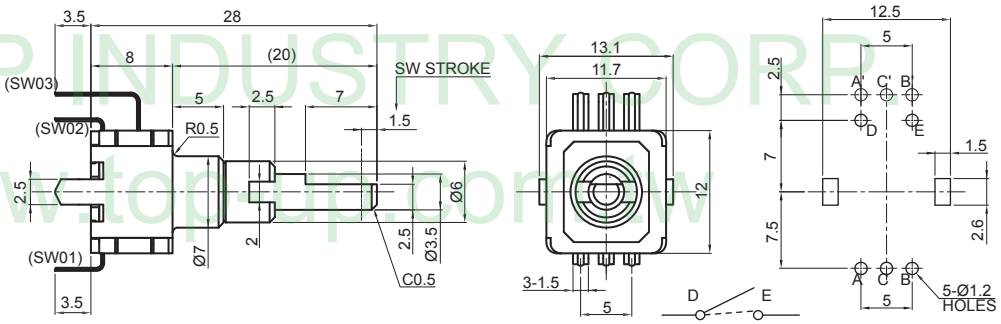

TOP-UP INDUSTRY CORP.
www.top-up.com.tw

11mm Size Series Encoders

Low-Profile Type

TOP-UP

Soldering condition

▲Manual Soldering
• Bit temperature of soldering : 350°C or less. / SMT : 380°C or less.
• Application time of soldering : within 3s.

▲Dip soldering
Preheating :
• Surface temperature of board : 100°C or less.
• Preheating time : within 2 min.
Soldering :
• Solder temperature : 260±5°C
• Immersion time : 5±1 sec.

▲Refolw soldering
Preheat:
• Temperature on the copper foil surface should reach 180°C , 2±0.3min after the P.W.B entered into the soldering equipment.
Soldering heat:
• Temperature on the copper foil surface should reach the peak temperature of 250°C±3°C within 10 seconds after the P.W.B entered into soldering heat zone.

*Apply the above soldering process for 1 or 2 times.

TOP-UP INDUSTRY CORP.
www.top-up.com.tw

TOP-UP INDUSTRY CORP.

www.top-up.com.tw
www.electronicpartstaiwan.com

8F, NO.189, YUNG AN RD.,
TAOYUAN DIST.,TAOYUAN CITY 330,
TAIWAN, (R.O.C.)

TEL：+886-3-3380787
FAX：+886-3-3380767

sales@top-up.com.tw