45MSRF1-B-C1M15-1V-B-N-10-6H

45mm 1 UNIT SLIDE SENSOR

1. Features

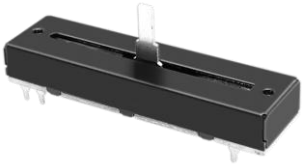

- Highly to linearity accuracy
  - Accuracy ≦ 1%
  - Absolute linearity accuracy
- Highly to sliding life
  - Life cycles ≧ 4,000,000 cycles
- One analog output signal
  - One analog output 0 ~ 5V (Up to 350ksps conversion rate)
  - Taper B output characteristic
- Highly resistant to dust ingress
- Contact-less magnetic and hall-effect sensor technology
- Higher reliability
- Better stability
- RoHS compliant

2. Applications

- Audio mixing consoles
- Lighting Control consoles
- Video mixer
- Communication facilities
- Master controller
- Industrial control
- Automotive
- Medical
- Defence industry

3. Description and Warning

This specification is applied to position detecting used for electronic equipment.

This product used magnetic and hall-effect sensor technology. Be aware of magnetic damages.

Be sure of magnetic field intensity less than 5 Gauss when installed.

Before handling components, use a grounded wrist strap or touch a safely grounded object or a metal object, such as the power supply case, to avoid damaging them due to static electricity.

Table of Contents

1. Feature 1
2. Applications 1
3. Description and Warning 1
4. Revision History 2
5. Pin Configuration and Functions 3
6. Electrical Characteristics 3
7. Environmental and Mechanical Characteristics 4
8. Condition of DIP soldering 5
9. Mechanical and Packaging Information 6

4. Revision History

Revision 1.0 (2017/08/17)

Initial revision.

5. Pin Configuration and Functions

Pin Functions

NAME	I/O	DESCRIPTION
1	I	Power supply
2	O	Analog Output
3	I	Ground

6. Electrical Characteristics

	MIN	TYPE	MAX	UNIT
Supply voltage	4.95	5	5.05	VDC
Supply Current			30(1)	mA
Power consumption		0.15		W
Analog output voltage	0~0.05		4.95~5.05	V

(1) 30mA @ 5VDC power supply.

7. Environmental and Mechanical Characteristics

Conditions: The standard test condition shall be 5~35°C in temperature, 45~85%RH and 860~1060mbar in atmospheric, should any doubt arise in judgement, tests shall be conducted at 20±2°C, 65±5%RH and 860~1060mbar.

	MIN	TYPE	MAX	UNIT
Operating temperature	-40		+85	℃
Insulation resistance @ 500 VDC	100M			Ω
Sliding life	4,000,000(1)			cycles
ESD rating (Contact)			±2	KV
ESD rating (Air)			±4	KV
Level travel	44.5	45	45.5	mm
Operating force	10		110(2)	G
Lever travel stop strength		Without excessive play(3)		-
Lever deviation			0.5(4)	mm

	MIN	TYPE	MAX	UNIT
Thrust and tensile lever		Without damage such as bed sliding and braking or play in the lever. Electrical characteristics shall be satisfied. (5)		-
Displacement of lever		2(6)		mm p-p
Voltage proof @ 250 VAC		Without damage to parts arcing or breakdown(7)		-
Lever inclination and torsion			2(8)	Degree

(1) The moving contact, without electrical load, shall be slided form one end stop to the other end returned to its original position extend over 90% or more effective distance. Slide speed: 600 cycle/hour.

(2) Traveling speed: 20mm/sec, operating position: 5mm from lever end.

(3) A static load of 10Kgf shall be applied at the point 5mm form top surface of the case for both ends in the direction of lever travel for 10 sec.

(4) On each end. After sliding lever as far as it will go in each direction. The distance from the center of the lever to the middle of the mounting screw hole shall be measured at the both ends.

(5) Thrust and tensile static load of 5Kgf shall be applied to the potentiometer in the lever direction for 10 sec.

(6) 2 x L/25, L=Length of lever. A torsion moment of 250gf-cm shall be applied at the lever in a direction perpendicular to the axial direction and then the displacement shall be measured.

(7) Applying 250VAC measure for 1 min. Applied position: Between terminal and frame. Between terminal and lever.

(8) Return to the same position after torsion.

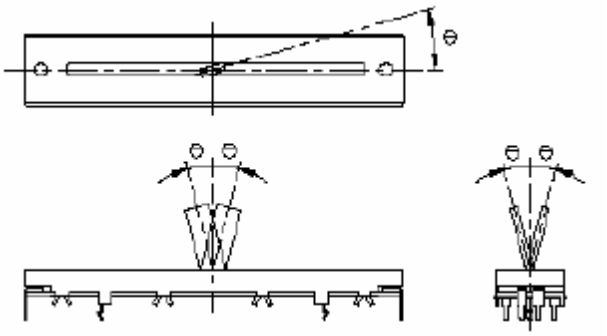

8. Condition of DIP soldering

	MIN	TYPE	MAX	UNIT
Specific gravity of flux	0.81	0.82(1)	0.83	-
Height of flux		Just under PCB(2)		-
Preheat temperature			100(3)	˚C
Solder temperature	255	260(4)	265	˚C
Manual solder temperature	345	350(5)	355	˚C

(1) Foaming type.

(2) As show.

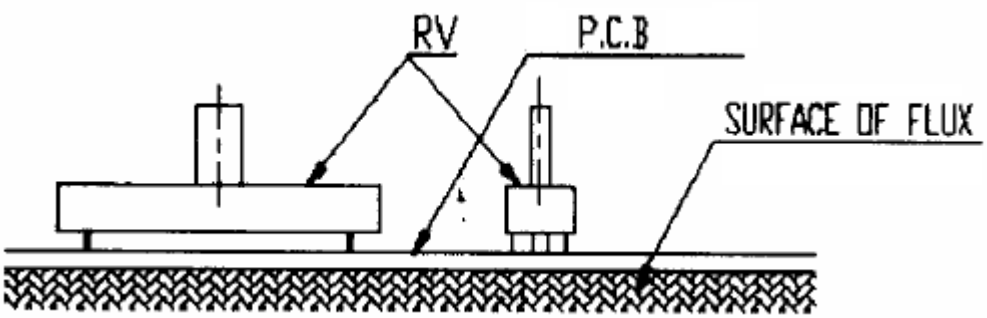

(3) 100˚C MAX within 2 MIN.

(4) 260˚C ±5˚C within 5 SEC.

(5) 350˚C ±5˚C within 3 SEC.

9. Mechanical and Packaging Information

PACKAGING FLOW CHART

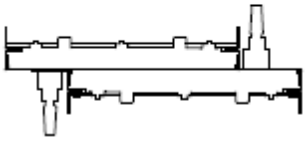

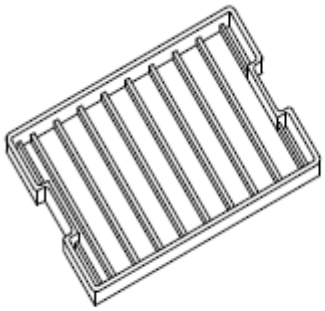

SAMPLE NUMBERS OF EACH PS BOX 48 Pcs

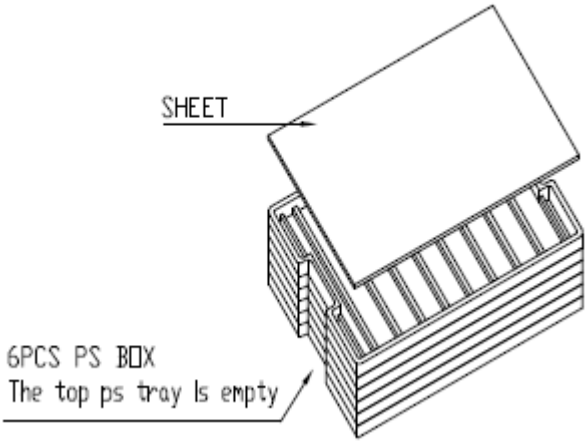

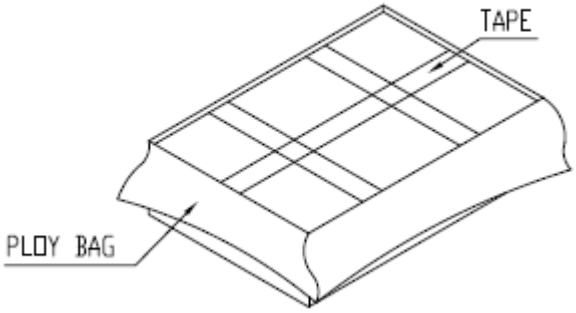

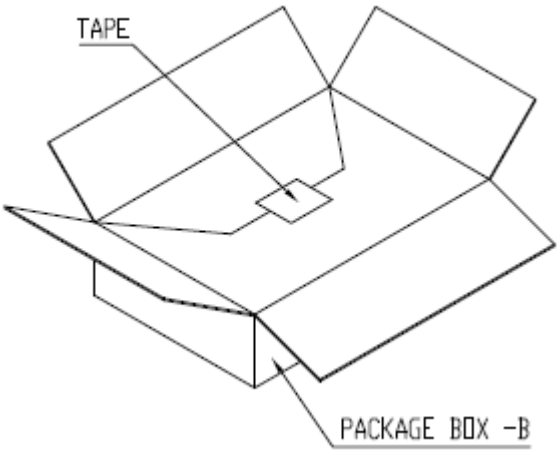

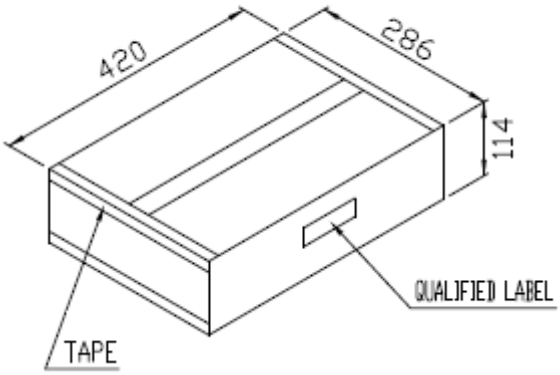

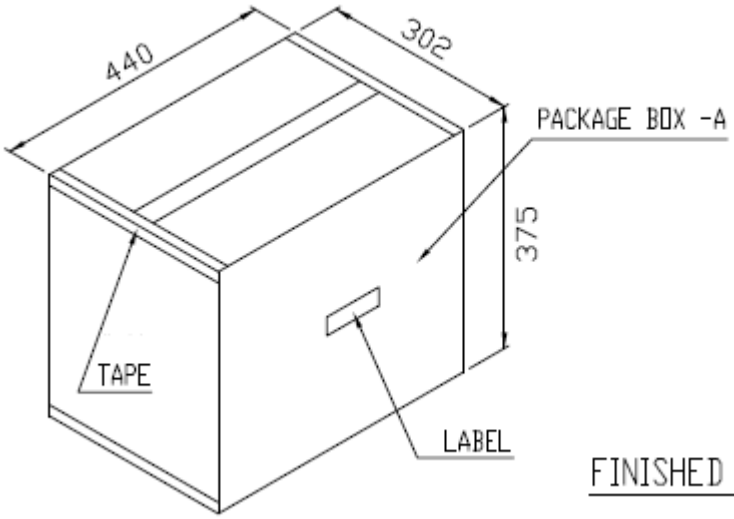

FINISHED DRAWING

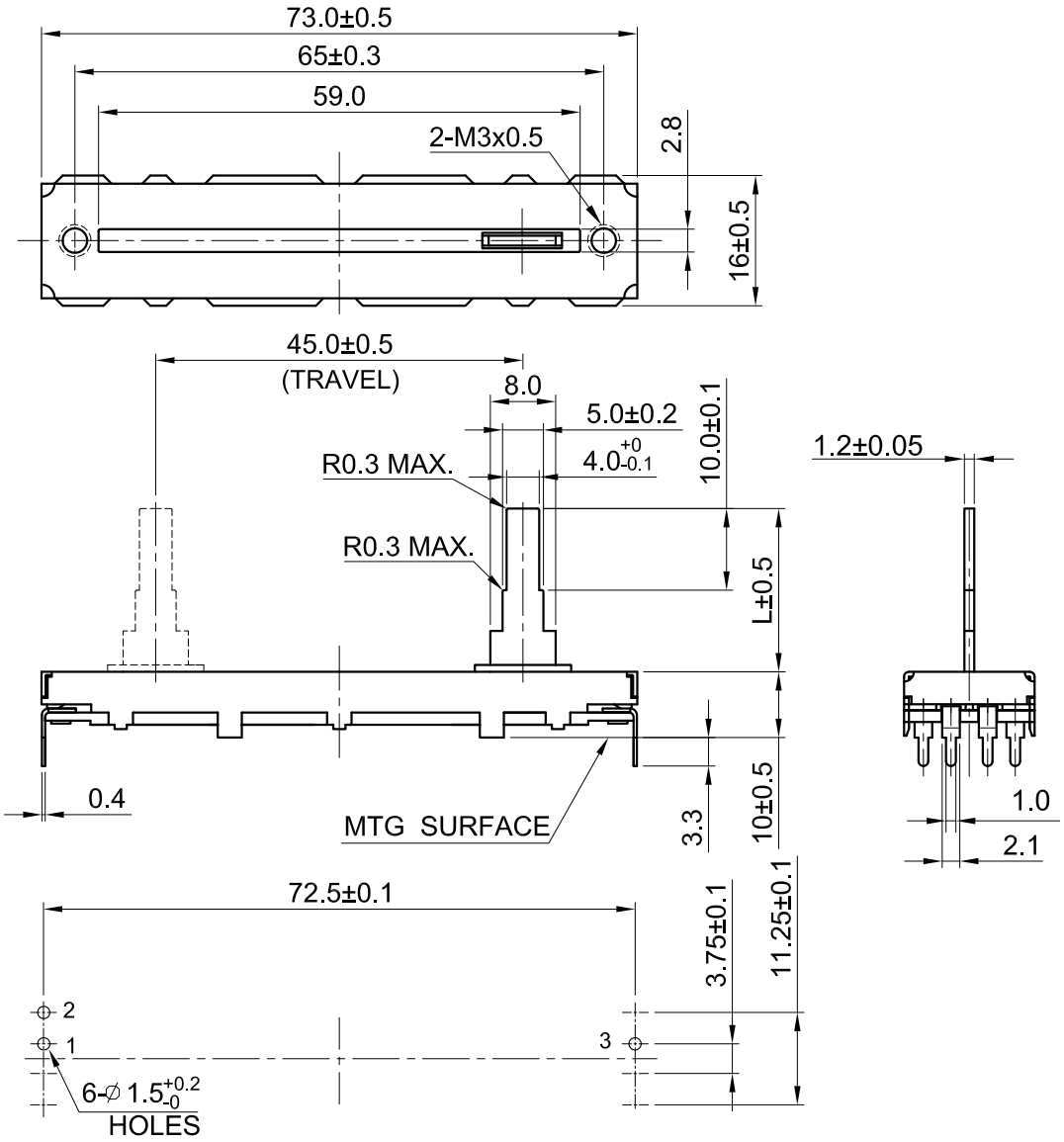

MOUNTING HOLES DETAIL

LEVER LENGTH:

L	15

NOTE : 1. MOUNTING SCREW THREAD LENGTH IS CHASSIS THICKNESS +3mm MAX.
2. WITHIN 30mm FORM B-B INCLUDED KNOB'S HEIGHT.

ROHS COMPLIANCE