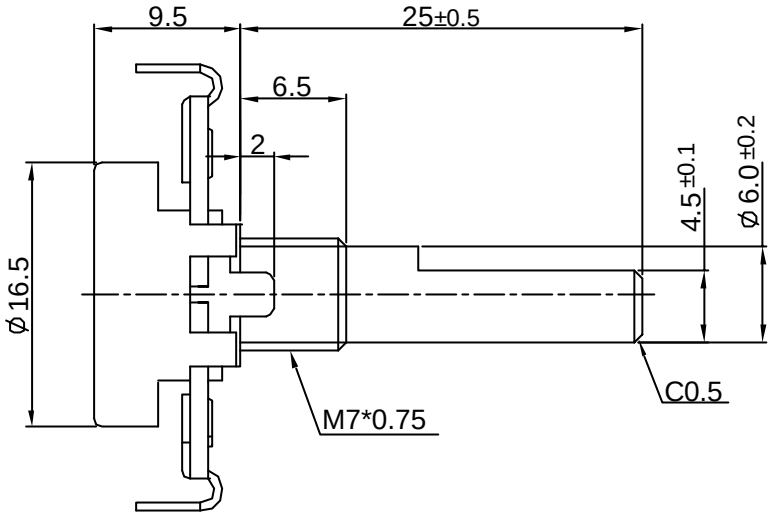

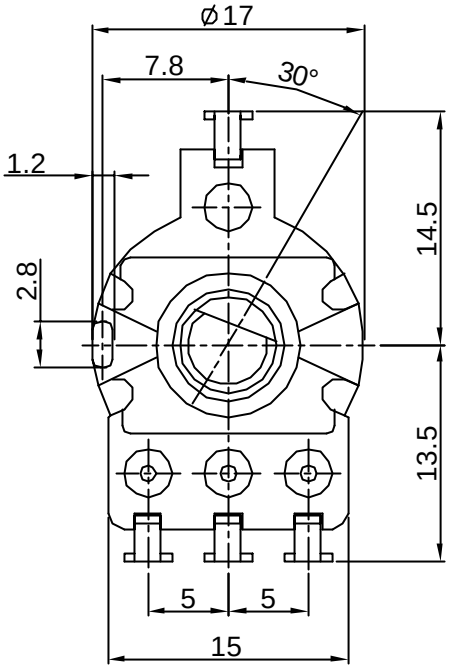

SHAFT SHOWN IN
FULL C.C.W POSITION

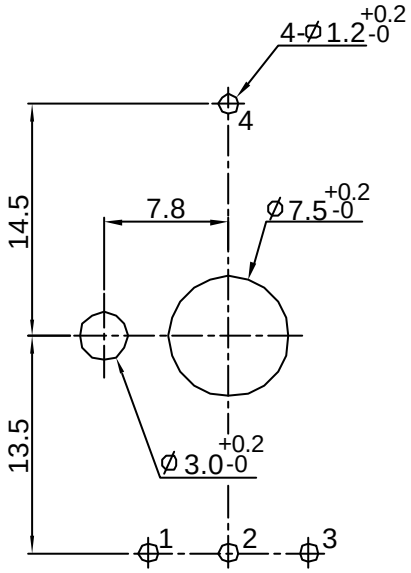

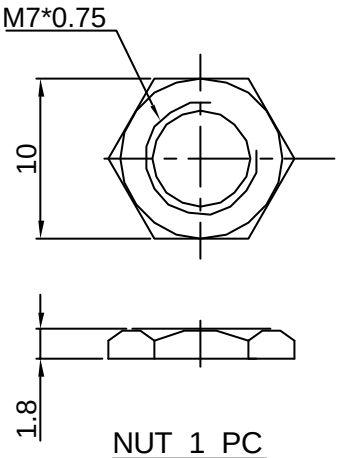

NUT 1 PC

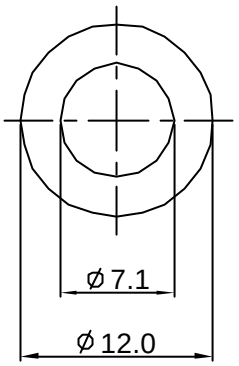

WASHER 1 PC
t=0.4

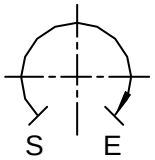

300° ROTATION
SINGLE UNIT

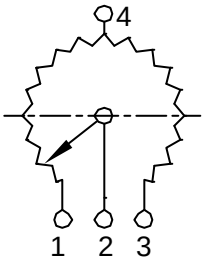

				MODEL NAME:	16M1HBUT-A-25F- -10S	
△			第三視角	DRAWING NO.	16M-014	
△				CODE NO.		
△				PATH:	Pot\Rotary\16mm\16M\I-sing	
△						

TOLERANCES		UNIT	SCALE	RELEASE	DRAWN BY	CHECKED BY	APPROVED BY
less than 10	±0.3	m/m	/	A	劉世金	JOANNE	汪智豔
above 10-30	±0.5						
above 30-100	±1						
angular dimension	±5°				2002.12.22	2002.12.22	2002.12.22

TOP-UP INDUSTRY CORP.